ORDER NO.DSD0503039C2

Service Manual

DVD Video Recorder

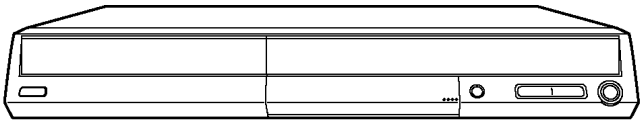

Notes: This model's DVD Drive is VXY1867.

DMR-ES10EB
DMR-ES10EC
DMR-ES10EG
DMR-ES10EP
DMR-ES10EBL

Vol.1

Colour

(S).....S ilver Type

(K).....B lack Type

Panasonic

© 2005 Matsushita Electric Industrial CO., Ltd. All rights reserved. Unauthorized copying and distribution is a violation of law.

Introduction

This service manual contains technical information which will allow service personnel's to understand and service this model.
Please place orders using the parts list and not the drawing reference numbers.

If the circuit is changed or modified, this information will be followed by supplement service manual to be filed with original service manual.

1) This service manual does not contain the following information, because of the impossibility of sevicing at component level.

* Schematic Diagram, Block Diagram and P.C.B. layout of Digital P.C.B.
* Parts List for individual parts of Digital P.C.B.
* Exploded View and Parts List for individual parts of RAM drive.

2) The following category are recycle module part. Please send them to Central Repair Center.

* Digital P.C.B. (ES10EB: RFKBES10EB, ES10EC: RFKBES10EC, ES10EG: VEP79104B, ES10EP: RFKBES10EP, ES10EBL: RFKBES10EBL)
* RAM drive (VXY1867)

Specifications

Power supply	AC220-240 V, 50 Hz	
Power consumption	23 W	
Recording system	DVD video recording format (DVD-RAM), DVD video format (DVD-R), DVD video format (DVD-RW)	
Optical pick-up	System with 1 lens, 2 integration units (662 nm wavelength for DVDs, 795 nm wavelength for CDs)	
Recordable discs	DVD-RAM	
	・Ver.2.0 Ver.2.1/3x-SPEED DVD-RAM Revision 1.0 ・Ver.2.2/5X-SPEED DVD-RAM Revision 2.0	
	DVD-R	
	・for General Ver.2.0 ・for General Ver.2.0/4X-SPEED DVD-R Revision 1.0 ・for General Ver.2.x/8X-SPEED DVD-R Revision 3.0	
	DVD-RW	
	・Ver.1.1 ・Ver.1.1/2x-SPEED DVD-RW Revision 1.0 ・Ver.1.2/4X-SPEED DVD-RW Revision. 2.0	
	+R	
	・Ver.1.0,Ver.1.1,Ver.1.2	
Quick Start for Recording (Quick Start: ON)	1 Sec. Quick Start for Recording on DVD-RAM* *From the power off state, for recording on DVD-RAM starts about 1 second after first pressing the power botton and then sequentially pressing the REC button (Quick Start Mode).	
Recording time (Approx.)	Max. 8 hours (using 4.7 GB disc) XP: 60 minutes SP: 120 minutes LP: 240 minutes EP: 360 minutes or 480 minutes	
Region number	Region No.2	
Discs played	DVD-RAM	
	DVD-R	
	DVD-RW	
	DVD+R	
	DVD+RW	
	DVD-Video,DVD-Audio,Video CD,CD-Audio (CD-DA)	
	CD-R/RW (MP3,CD-DA,Video CD, JPEG formatted discs)	
Compression Method	MP3	
	Format : ISO9660 level1 or 2 (except for extended formats), Joliet Compatible compression rate : 32kbps ～ 320kbps Compatible sampling rate : 16kHz, 22.05kHz, 24kHz, 32kHz, 44.1kHz, 48kHz This unit is not compatible with ID3 tags.	
	CD (JPEG)	
	Format : ISO9660 level1 or 2 (except for extended formats), Joliet Compatible pixels : between 34×34 and 6144×4096 pixels Sub Sampling 4:2:2 or 4:2:0 This unit is not compatible with MOTION JPEG.	
	MP3, CD (JPEG) Common Items	
	Maximum number of folders : 99 (one disc) Maximum number of files : 999 (one disc) This unit is compatible with multi-session. This unit is not compatible with packet writing.	
Video system		
TV system	ES10EC, ES10EG ES10EP	SECAM(Only Input)/PAL system, 625 lines, 50 fields/NTSC system, 525 lines, 60 fields
	ES10EB,ES10EBL	PAL system, 625 lines, 50 fields /NTSC system, 525 lines, 60 fields
Recording system	MPEG2 (Hybrid VBR)	
Video Input *Note: ES10EC/EG/EP Only	Video In: (*SECAM/PAL /NTSC)	AV1/AV2(21pin x 2), AV3/AV4(pin jack x 2) 1.0Vp-p ; 75Ω
	S-Video In: (*SECAM/PAL /NTSC)	AV2(21pin), AV3/AV4(S connector x 2) Y:1.0Vp-p ; 75Ω, C:0.3Vp-p ; 75Ω
	RGB In(PAL):	AV2(21pin) 0.7Vp-p ; 75Ω

Video Output	Video Out: (PAL/NTSC)	AV1/AV2(21pin x 2), LINE(pin jack x 1)1.0Vp-p ; 75Ω
	S-Video Out: (PAL/NTSC)	AV1(21pin), S connector x 1 Y:1.0Vp-p ; 75Ω, C:0.3Vp-p ; 75Ω
	RGB Out: (PAL/NTSC)	AV1(21pin), 0.7Vp-p ; 75Ω
	Component video out: (NTSC 480P/480I) (PAL 576P/576I)	Y: 1.0Vp-p ; 75Ω (pin jack) PB: 0.7Vp-p ; 75Ω (pin jack) PR: 0.7Vp-p ; 75Ω (pin jack)
Antenna reception system	ES10EC, ES10EG	
	CCIR (PAL-BGH) (SECAM-BG)	VHF: CH E2 - CH E12, CH A - CH H2 (For Italy) UHF: CH 21 - CH 69 CATV: CH S01 - CH S05(S1-S3), CH S1 - CH S20(M1-U10), CH S21 - CH S41
	France (SECAM-L,L') ES10EC only	VHF: CH 2 - CH 10 UHF: CH 21 - CH 69 CATV: CH B - CH Q (100.5-299.5MHz), CH S21 - CH S41 (299.5-467.25MHz)
	ES10EB, ES10EBL	
	PAL-I	VHF: CH 4 CH 13, CH A - CH J(For ES10EBL) UHF: CH 21 - CH 68
	ES10EP	
	OIRT (PAL-DK) (SECAM-DKK1)	VHF: CH R1 - CH R12 UHF: CH 21 - CH 69 CATV: CH 44MHz - 470MHz
	CCIR (PAL-BGH) (SECAM-BG)	VHF: CH E2 - CH E12 UHF: CH E21 - CH E69 CATV: CH S01 - S05, M1 - M10, U1 - U10, S21 - S41
	South Africa(PAL-I)	VHF: CH 4 - CH 13 UHF: CH 21 - CH 68
RF Converter Output	ES10EB	UHF: CH 21 - CH 68, 71±3dBuV;75Ω
	Except ES10EB	Not provided
Audio system		
Recording system	Dolby Digital 2ch	
Analog Input	AV1/AV2(21pin x 2), AV3/AV4(pin jack x 2) Standard input: 0.5 Vrms Full scale: 2.0 Vrms at 1KHz Input impedance: More than 10KΩ	
Analog Output	AV1/AV2(21pin x 2), LINE(pin jack x 1) Standard output: 0.5 Vrms Full scale: 2.0 Vrms at 1KHz Output impedance: Less than 1.0KΩ	
Number of channels	Recording: 2 channels Playback: 2 channels	
Digital Output	Digital Audio Optical Output Connector (PCM,Dolby Digital,DTS,MPEG)	
Dimensions	Approx. 430 (W) x 63 (H) x 337 (D) mm [Approx. 16 15/16" (W) x 2 1/2" (H) x 13 5/16" (D)] (excluding protrusions)	
Mass	Approx. 3.5 kg (7.70 lbs)	
Operating temperature	5°C - 40 C (41 F - 104 F)	
Operating humidity range	10 %-80 % RH (no condensation)	
Clock unit	Quartz-controlled 12-hour digital display	
LASER Specification (Class I LASER Product)		
Wave length	795 nm(CDs), 662 nm(DVDs)	
Laser power	No hazardous radiation is emitted with the safety protection.	
Power consumption in standby mode	approx. 3.0 W	
Solder	These models use lead free solder (PbF).	

Notes : Mass and dimensions are approximate.
Specifications are subject to change without notice.

⚠ WARNING

This service information is designed for experienced repair technicians only and is not designed for use by the general public.
It does not contain warnings or cautions to advise non-technical individuals of potential dangers in attempting to service a product.
Products powered by electricity should be serviced or repaired only by experienced professional technicians. Any attempt to service or repair the product or products dealt with in this service information by anyone else could result in serious injury or death.

CONTENTS

Page

1 Safety precautions ---- **5**
1.1. General guidelines ---- 5
2 Prevention of Electrostatic Discharge (ESD) to Electrostatic Sensitive (ES) Devices ---- **6**
3 Precaution of Laser Diode ---- **7**
4 Handling the Lead-free Solder ---- **7**
4.1. About lead free solder (PbF) ---- 7
5 Each Button ---- **8**
6 New Feature ---- **10**
6.1. Quick start function(REC) ---- 10
7 Taking out the Disc from RAM-Drive Unit when the Disc cannot be ejected by OPEN/CLOSE button ---- **11**
7.1. Forcible Disc Eject ---- 11
7.2. When the Forcible Disc Eject can not be done. ---- 11
8 Service Explorer ---- **12**
9 Self-Diagnosis and Special Mode Setting ---- **15**
9.1. Self-Diagnosis Functions ---- 15
9.2. Special Modes Setting ---- 16
9.3. Service Modes ---- 18
10 Assembling and Disassembling ---- **22**
10.1. Disassembly Flow Chart ---- 22
10.2. P.C.B. Positions ---- 22
10.3. Top Case ---- 23
10.4. Front Panel ---- 23
10.5. Digital P.C.B. ---- 23
10.6. DVD-RAM Drive ---- 24
10.7. Power P.C.B. ---- 24
10.8. Rear Panel ---- 24
10.9. Front (L) P.C.B. ---- 25
10.10. Main P.C.B. ---- 25
10.11. Tuner P.C.B. and Nicam Decoder P.C.B. ---- 25
11 Service Fixture and Tools ---- **26**
12 Service Positions ---- **26**
12.1. Checking and Repairing of Power P.C.B. ---- 26
12.2. Checking and Repairing of Digital P.C.B. ---- 27
12.3. Checking and Repairing of Main P.C.B. ---- 28
12.4. Checking and Repairing of DVD-RAM Drive ---- 29

Page

13 Caution after replacing parts ---- **30**
13.1. After replacing the RAM Drive with new one ---- 30
13.2. When the unit does not operate normally after replacing the Timer Microprocessor or Main P.C.B. ---- 30
14 Standard Inspection Specifications after Making Repairs ---- **30**
15 Voltage and Waveform Chart ---- **31**
15.1. Power P.C.B. ---- 31
15.2. Main P.C.B. ---- 31
15.3. Tuner P.C.B. ---- 33
15.4. P9001 Connector ---- 33
15.5. Waveform Chart ---- 34
16 Abbreviations ---- **35**
17 Block Diagram ---- **37**
17.1. Power Supply Block Diagram ---- 37
17.2. Analog Video Block Diagram ---- 39
17.3. Analog Audio Block Diagram ---- 40
17.4. Timer Block Diagram ---- 41
18 Schematic Diagram ---- **43**
18.1. Interconnection Schematic Diagram ---- 43
18.2. Power Supply Schematic Diagram ---- 44
18.3. Main Net Section (Main P.C.B. (1/3)) Schematic Diagram (M) ---- 46
18.4. A/V I/O Section (Main P.C.B. (2/3)) Schematic Diagram (AI) ---- 48
18.5. Timer Section (Main P.C.B. (3/3)) Schematic Diagram (T) ---- 50
18.6. Tuner Pack Schematic Diagram ---- 52
18.7. Nicam Decoder Schematic Diagram ---- 53
19 Print Circuit Board ---- **55**
19.1. Power P.C.B. ---- 55
19.2. Main P.C.B. ---- 56
19.3. Tuner P.C.B., Front (L) P.C.B. ---- 61
19.4. Nicam Decoder P.C.B. ---- 62
20 Exploded Views ---- **63**
20.1. Casing Parts & Mechanism Section ---- 63
20.2. Packing & Accessories Section ---- 64
21 Replacement Parts List ---- **65**

1 Safety precautions

1.1. General guidelines

1. When servicing, observe the original lead dress. If a short circuit is found, replace all parts which have been overheated or damaged by the short circuit.
2. After servicing, see to it that all the protective devices such as insulation barriers, insulation papers shields are properly installed.
3. After servicing, make the following leakage current checks to prevent the customer from being exposed to shock hazards.

1.1.1. Leakage current cold check

1. Unplug the AC cord and connect a jumper between the two prongs on the plug.
2. Measure the resistance value, with an ohmmeter, between the jumpered AC plug and each exposed metallic cabinet part on the equipment such as screwheads, connectors, control shafts, etc. When the exposed metallic part has a return path to the chassis, the reading should be between 1MΩ and 5.2MΩ.
   When the exposed metal does not have a return path to the chassis, the reading must be ∞.

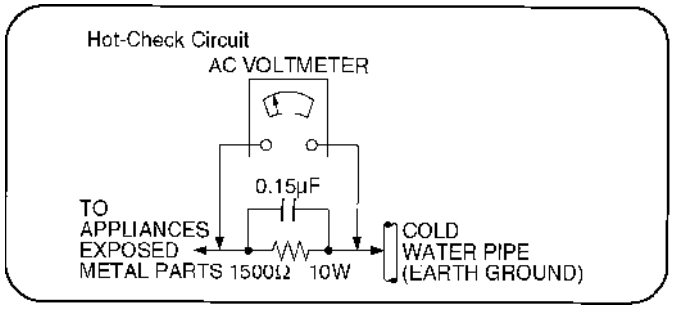

Figure 1

1.1.2. Leakage current hot check (See Figure 1 .)

1. Plug the AC cord directly into the AC outlet. Do not use an isolation transformer for this check.
2. Connect a 1.5kΩ, 10 watts resistor, in parallel with a 0.15μF capacitors, between each exposed metallic part on the set and a good earth ground such as a water pipe, as shown in Figure 1.
3. Use an AC voltmeter, with 1000 ohms/volt or more sensitivity, to measure the potential across the resistor.
4. Check each exposed metallic part, and measure the voltage at each point.
5. Reverse the AC plug in the AC outlet and repeat each of the above measurements.
6. The potential at any point should not exceed 0.75 volts RMS. A leakage current tester (Simpson Model 229 or equivalent) may be used to make the hot checks, leakage current must not exceed 1/2 milliampere. In case a measurement is outside of the limits specified, there is a possibility of a shock hazard, and the equipment should be repaired and rechecked before it is returned to the customer.

2 Prevention of Electrostatic Discharge (ESD) to Electrostatic Sensitive (ES) Devices

Some semiconductor (solid state) devices can be damaged easily by static electricity. Such components commonly are called Electrostatic Sensitive (ES) Devices. Examples of typical ES devices are integrated circuits and some field-effect transistor-sand semiconductor "chip" components. The following techniques should be used to help reduce the incidence of component damage caused by electrostatic discharge (ESD).

1. Immediately before handling any semiconductor component or semiconductor-equipped assembly, drain off any ESD on your body by touching a known earth ground. Alternatively, obtain and wear a commercially available discharging ESD wrist strap, which should be removed for potential shock reasons prior to applying power to the unit under test.
2. After removing an electrical assembly equipped with ES devices, place the assembly on a conductive surface such as aluminum foil, to prevent electrostatic charge buildup or exposure of the assembly.
3. Use only a grounded-tip soldering iron to solder or unsolder ES devices.
4. Use only an anti-static solder removal device. Some solder removal devices not classified as "anti-static (ESD protected)" can generate electrical charge sufficient to damage ES devices.
5. Do not use freon-propelled chemicals. These can generate electrical charges sufficient to damage ES devices.
6. Do not remove a replacement ES device from its protective package until immediately before you are ready to install it. (Most replacement ES devices are packaged with leads electrically shorted together by conductive foam, aluminum foil or comparable conductive material).
7. Immediately before removing the protective material from the leads of a replacement ES device, touch the protective material to the chassis or circuit assembly into which the device will be installed.

   Caution

   Be sure no power is applied to the chassis or circuit, and observe all other safety precautions.
8. Minimize bodily motions when handling unpackaged replacement ES devices. (Otherwise hamless motion such as the brushing together of your clothes fabric or the lifting of your foot from a carpeted floor can generate static electricity sufficient to damage an ES device).

IMPORTANT SAFETY NOTICE

There are special components used in this equipment which are imporant for safety.
These parts are marked by ⚠ in the schematic diagrams, Exploded Views and replacement parts list. It is essential that these critical parts should be replaced with manufacturer's specified parts to prevent shock, fire, or other hazards. Do not modify the original design without permission of manufacturer.

3 Precaution of Laser Diode

CAUTION:

This product utilizes a laser diode with the unit turned “on”, invisible laser radiation is emitted from the pickup lens.
Wave length: 662 nm (DVDs)/795 nm (CDs)
Maximum output radiation power from pickup: 100 μ W/VDE
Laser radiation from the pickup lens is safety level,but be sure the followings:

1. Do not disassemble the optical pickup unit, since radiation from exposed laser diode is dangerous.
2. Do not adjust the variable resistor on the pickup unit. It was already adjusted.
3. Do not look at the focus lens using optical instruments.
4. Recommend not to look at pickup lens for a long time.

ACHTUNG:

Dieses Produkt enthält eine Laserdiode.
Im eingeschalteten Zustand wird unsichtbare Laserstrahlung von der Laserinheit abgestrahlt.
Wellenlänge: 662 nm (DVDs)/795 nm (CDs)
Maximale Strahlungsleistung der Lasereinheit: 100 μ W/VDE
Die Strahlung der Lasereinheit ist ungefährlich, wenn folgende Punkte beachtet werden:

1. Die Lasereinheit nicht zerlegen, da die Strahlung an der freigelegten Laserdiode gefährlich ist.
2. Den werkseitig justierten Einstellregler der Lasereinheit nicht verstellen.
3. Nicht mit optischen Instrumenten in die Fokussierlinse blicken.
4. Nicht über längere Zeit in die Fokussierlinse blicken.

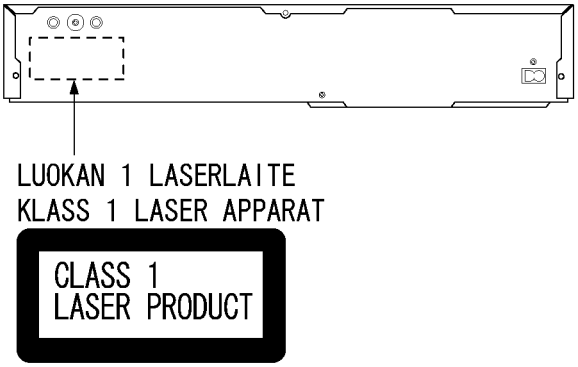

DANGER	- VISIBLE AND INVISIBLE LASER RADIATION WHEN OPEN. AVOID DIRECT EXPOSURE TO BEAM. (FDA 21 CFR)
CAUTION	- VISIBLE AND INVISIBLE LASER RADIATION WHEN OPEN. AVOID EXPOSURE TO BEAM. (IEC60825-1)
ATTENTION	- RAYONNEMENT LASER VISIBLE ET INVISIBLE EN CAS D'OUVERTURE. EXPOSITION DANGEREUSE AU FAISCEAU.
ADVARSEL	- SYNLIG OG USYNLIG LASERSTRÅLING VED ÅBNING. UNDGÅ UDSÆTTELSE FOR STRÅLING.
VARO!	- AVATTAESSA OLET ALTTIINA NÄKYVÄÄ JA NÄKYMÄTÖN LASERSÄTEILYLLE. ÄLÄ KATSO SÄTEESEEN.
VARNING	- SYNLIG OCH OSYNLIG LASERSTRÅLNING NÄR DENNA DEL ÄR ÖPPNAD. BETRAKTA EJ STRÅLEN.
ADVARSEL	- SYNLIG OG USYNLIG LASERSTRÅLING NÅR DEKSEL ÅPNES. UNNGÅ EKSPONERING FOR STRÅLEN.
VORSICHT	- SICHTBARE UND UNSICHTBARE LASERSTRAHLUNG, WENN ABDECKUNG GEÖFFNET. NICHT DEM STRAHL AUSSETZEN.
注 意	- 打开时有可见及不可见激光辐射。避免激光束照射。
注 意	- ここを開くと可視及び不可視のレーザー光が出ます。ビームを直視たり、触れたりしないでください。 RQLS0233

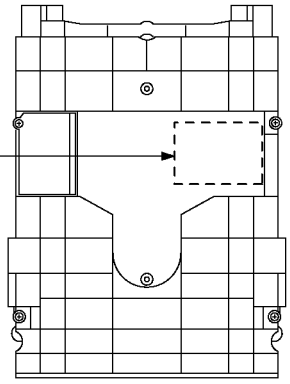

CAUTION!
THIS PRODUCT UTILIZES A LASER.
USE OF CONTROLS OR ADJUSTMENTS OR PERFORMANCE OF PROCEDURES OTHER THAN THOSE SPECIFIED HEREIN MAY RESULT IN HAZARDOUS RADIATION EXPOSURE.

4 Handling the Lead-free Solder

4.1. About lead free solder (PbF)

Distinction of PbF P.C.B.:

P.C.B.s (manufactured) using lead free solder will have a PbF stamp on the P.C.B.

Caution:

- Pb free solder has a higher melting point than standard solder; Typically the melting point is 50 - 70°F (30 - 40°C) higher. Please use a high temperature soldering iron. In case of the soldering iron with temperature control, please set it to 700 ± 20°F (370 ± 10°C).
- Pb free solder will tend to splash when heated too high (about 1100°F/600°C).
- When soldering or unsoldering, please completely remove all of the solder on the pins or solder area, and be sure to heat the soldering points with the Pb free solder until it melts enough.

5 Each Button

For DMR-ES10EC/EG/EP

Remote control

e.g., Continental Europe

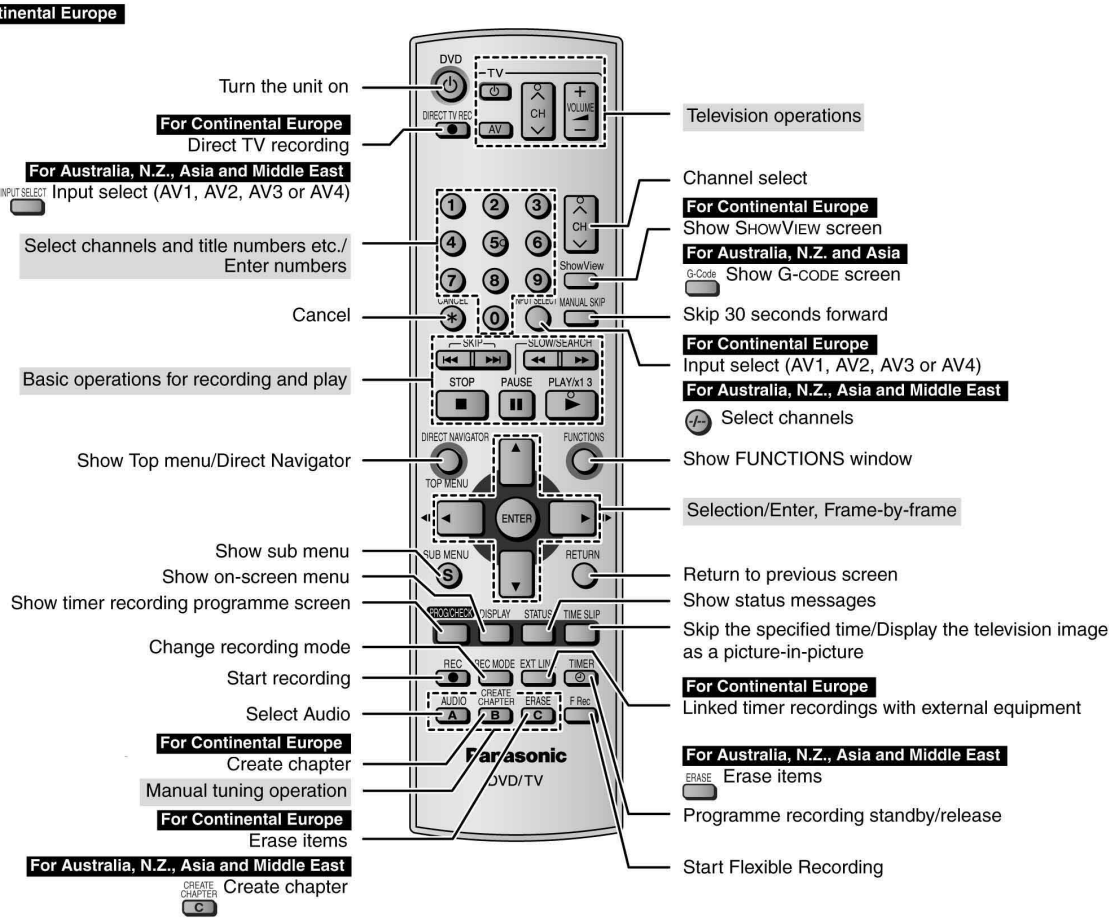

Main unit

e.g., Continental Europe

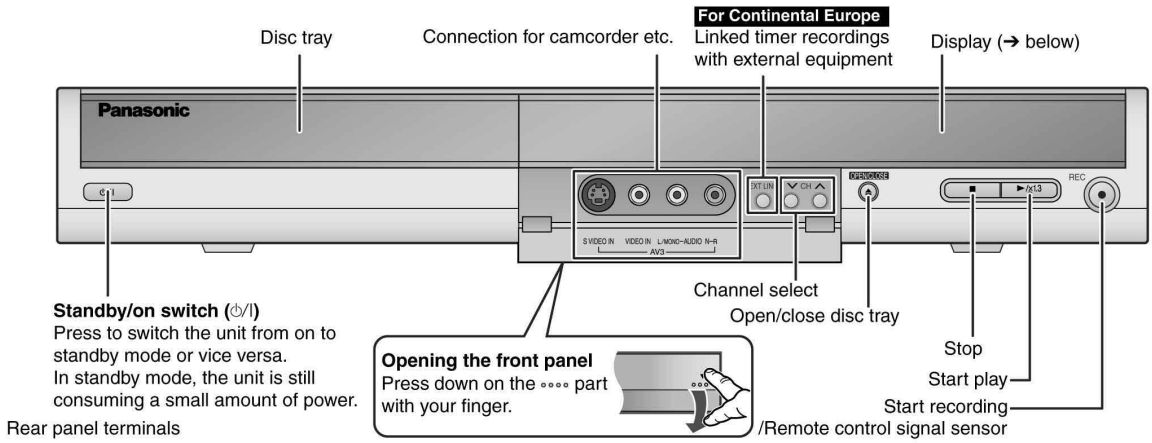

The unit's display

e.g., Continental Europe

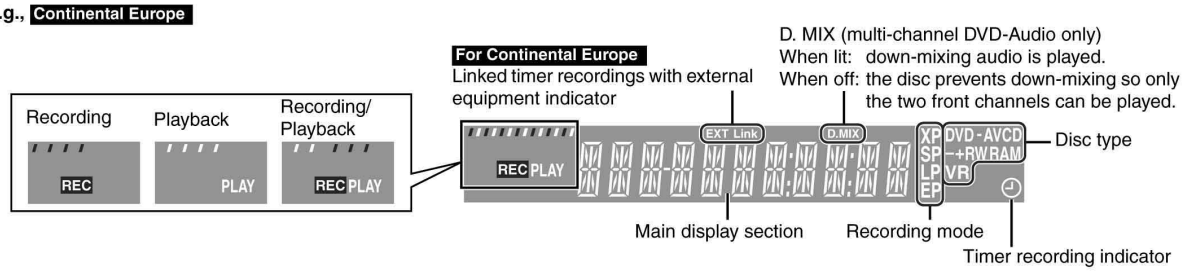

For DMR-ES10EB/EBL

Remote control

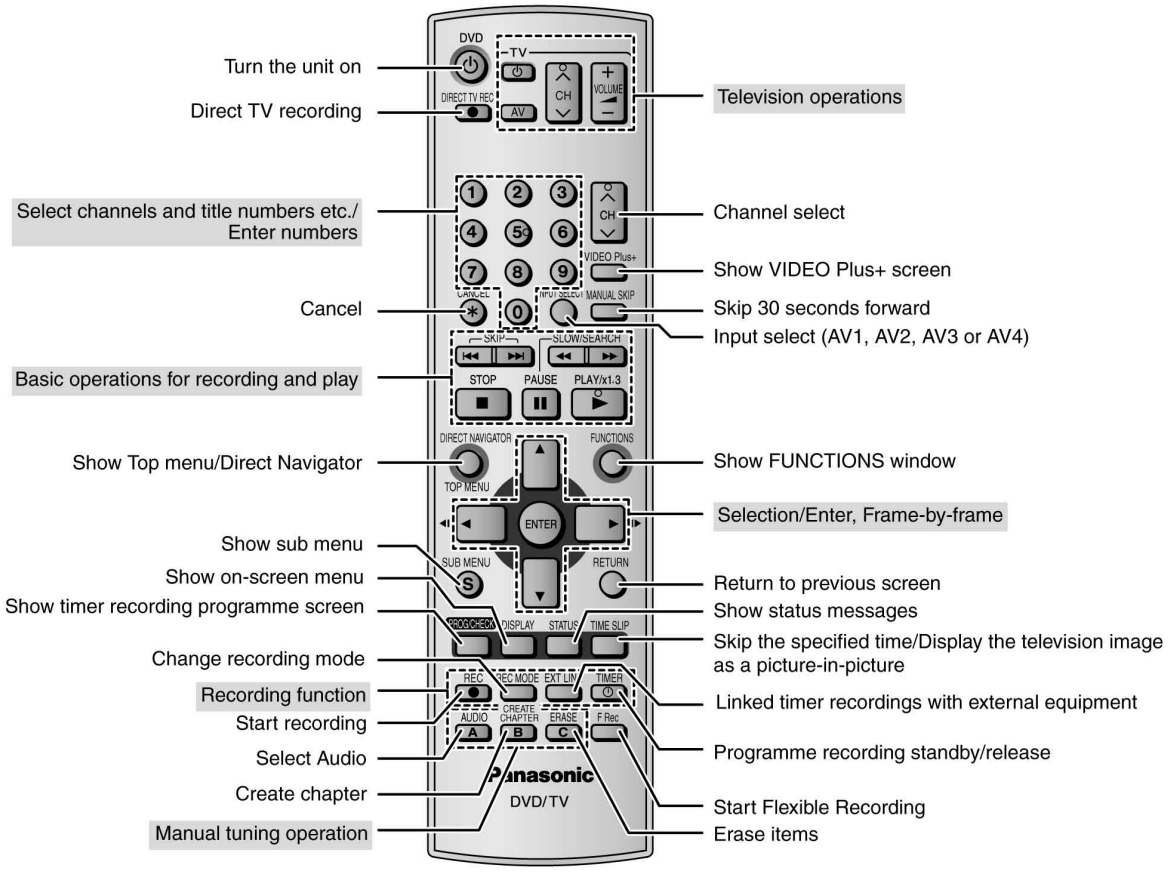

Main unit

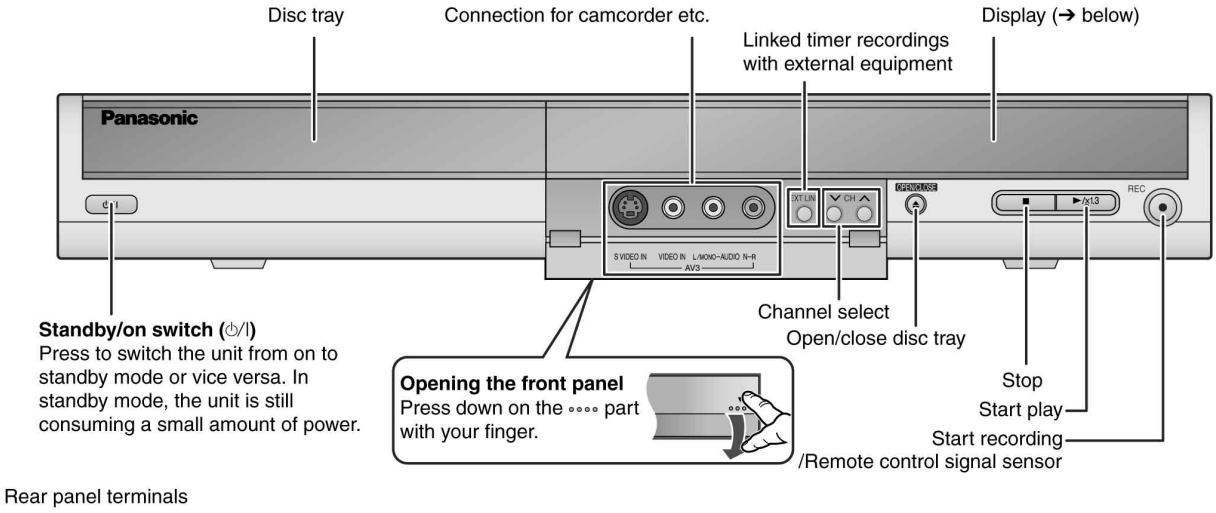

Rear panel terminals

The unit's display

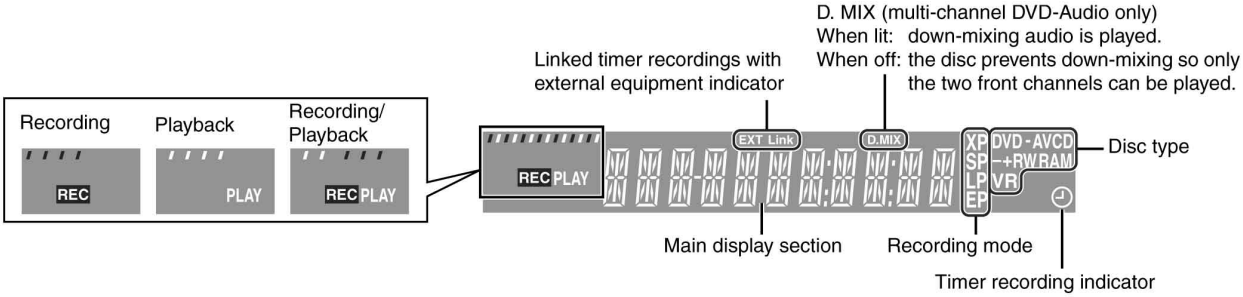

6 New Feature

6.1. Quick start function(REC)

(Note: Descriptions concerning HDD is applied only to models with HDD.)

1. General

A few seconds after tuning on the unit,you can start recording to DVD-RAM,HDD.

You can switch the operation of this function (ON/OFF) on the menu screen. .

2. Quick start(REC) principle

In the power-off at Quick start, only power supplies for video IC,tuner and storage media are cut off.

①When the REC button is pushed a few second after the power button is pushed, Audio and Video data are stored in DDR SDRAM before a storage media(DVD-RAM or HDD) preparation.

*Preparation time → DVD-RAM: Fabout 8seconds

②After a storage media(DVD-RAM or HDD) preparation,Audio and Video data are transfer from DDR SDRAM to the storage media.

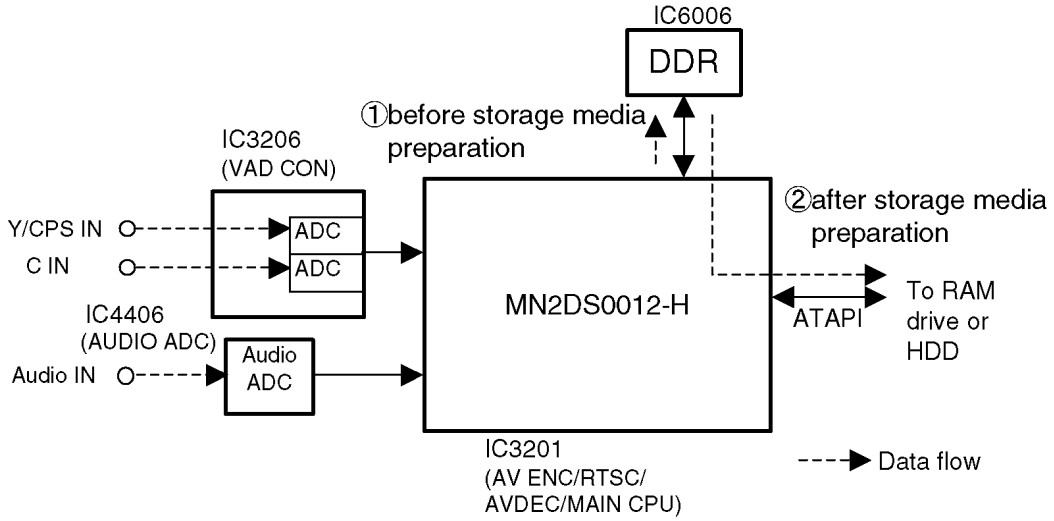

Quick start(REC) explanation chart

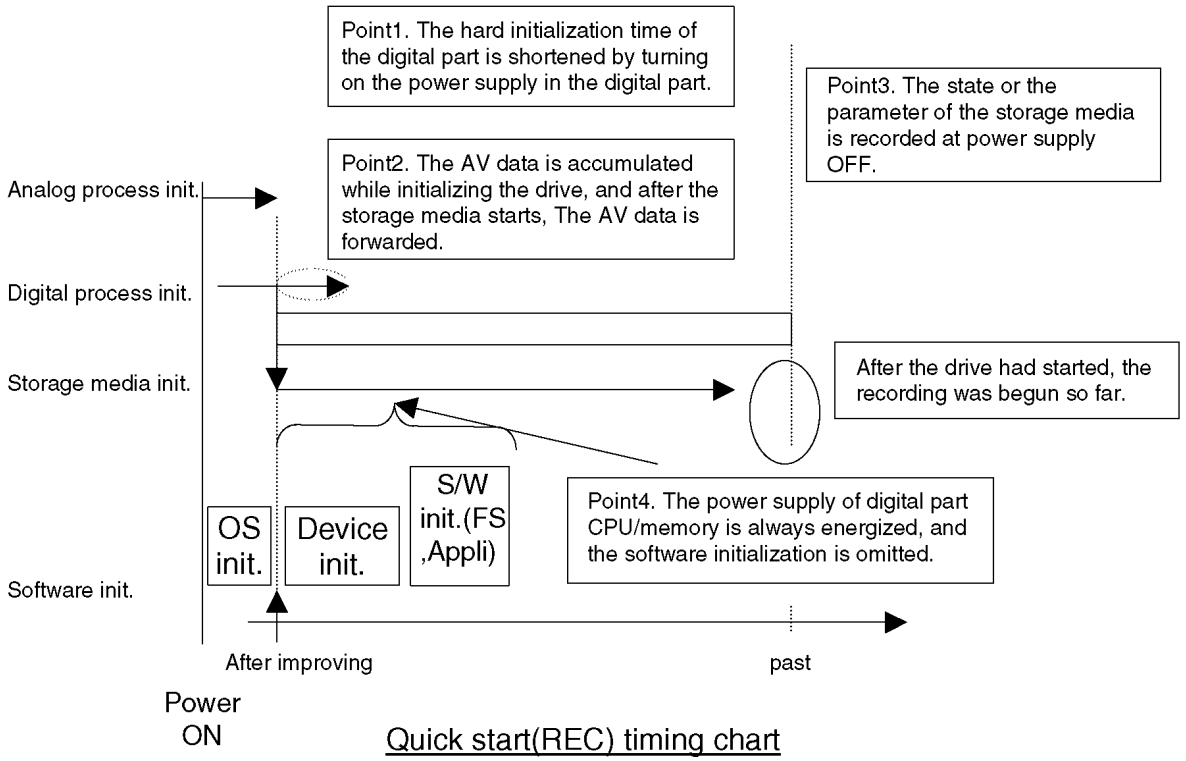

Quick start(REC) timing chart

7 Taking out the Disc from RAM-Drive Unit when the Disc cannot be ejected by OPEN/CLOSE button

7.1. Forcible Disc Eject

7.1.1. When the power can be turned off.

1. Turn off the power and press [STOP] [CH UP] keys on the front panel simultaneously for 5 seconds.

7.1.2. When the power can not be turned off.

1. Press [POWER] key on the front panel for over 10 seconds to turn off the power forcibly, and press [STOP] [CH UP] keys on the front panel simultaneously for 5 seconds.

7.2. When the Forcible Disc Eject can not be done.

1. Turn off the power and pull out AC cord.
2. Remove the Top Case.
3. Remove the Front Panel.
4. Remove 4 screws and Upper Base Unit from DVD-RAM Drive.
5. Take out the disc and put the Opener Roller on fully position for direction of Arrow.
6. Put the Upper Base Unit so that the Opener Roller is inserted into the groove.
7. Check Opener Roller is seen through the Opener position Checking Hole, and tighten 4 screws.

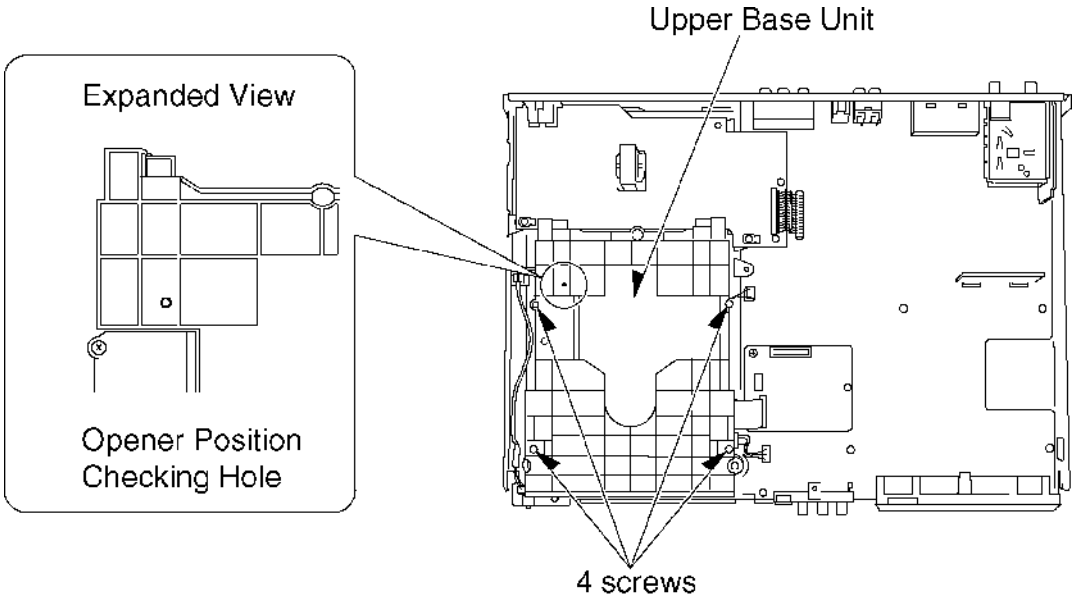

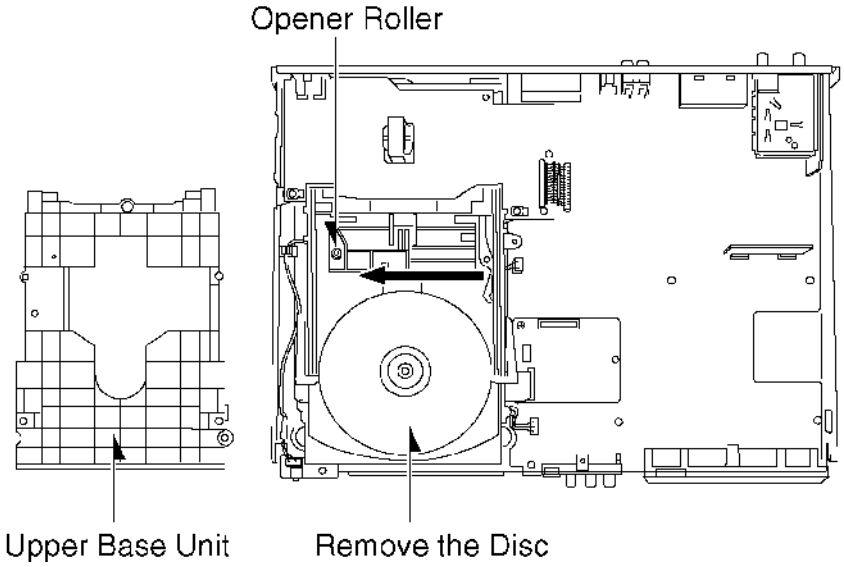

8 Service Explorer

Confirm "RAM-Drive Last Error" in Service Mode

Execute Service Mode

1. Press [REC], [CH UP] and [OPEN/CLOSE] simultaneously for 5 seconds when P-off.

   FL Display:

   SERVICE MODE

   *After finishing display "(7). Factor of Drive Error occurring", press [0] [2] ~[1] [9] keys of the Remote Controller so that 19 memories can be displayed as maximum.

2. Press [4] [2] keys of remote controller.

   Example of FL Display:

   (1) Error Number is displayed for 5 seconds.

   NO 01

   (2) Time when the error has occurred is displayed for 5 seconds.

   50216191526

   The error has occurred at 2005(year)/Feb.(month)/16(day)/19(hour):15(minute):26(second)

   (3) Last Drive Error (1/2) is displayed for 5 seconds.

   031000

   Error Sense Key
   - 00: Bad disc
   - 03: Bad disc
   - 04: Bad disc or RAM-Drive malfunction

When above error codes are displayed, confirm operation with Panasonic RAM disc or Panasonic DVD-R disc.
***If the operation is OK, judge the error is due to media.**
***If the operation is NG and symptom as BLOCK NOISES and so on that are particular symptom of Digital appears, judge the error is due to RAM-Drive or Digital PCB.**

   (4) Last Drive Error (2/2) is displayed for 5 seconds.

   00 13 00 00

   *This error code is unnecessary for service.

(5) Error occurring Disc type is displayed for 5 seconds.

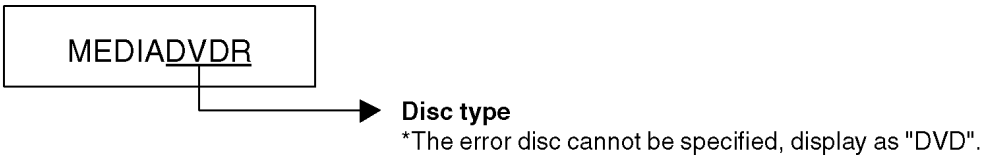

(6) Disc Maker´s ID is displayed for 5 seconds.

Example of Disc Maker´s ID:

DVD-R Disc

No.	FL Display (Disc Maker´s ID)	Disc Maker	Country
1	MEI	Panasonic	Japan
2	PVC	Pioneer	Japan
3	MCC	Mitsubishi Chemical Corporation	Japan
4	TDK	TDK	Japan
5	MXL	Maxell	Japan
6	MCI	MITUI CHEMICALS	Japan
7	JVC	Victor JVC	Japan
8	TAIYOYUDEN	Taiyo yuden	Japan
	TYG		
9	GSC	Giga Storage	Taiwan
10	PRODISC	Prodisc	Taiwan
11	PRINCO	PRINCO	Taiwan
12	RITEK	RITEK	Taiwan
13	OPTDISC	OPTDISC	Taiwan
14	LEAD DATA	LEAD DATA	Taiwan
15	CMC	CMC	Taiwan
16	AUVISTAR	AUVISTAR	Taiwan
17	ACER	Acer	Taiwan
18	VIVASTAR	VIVASTAR	Switzerland
19	LGE	LG Electronics	Korea

DVD-RAM Disc

No.	FL Display (Disc Maker´s ID)	Disc Maker	Country
1	MEI	Panasonic	
2	MATSUSHITA	Panasonic	Japan
3	MXL	Maxell	Japan
4	PRODISC	Prodisc	Taiwan
5	OPTDISC	OPTDISC	Taiwan
6	CMC	CMC	Taiwan

*Since an display is arbitrarily set up by the disk producer side, the above-mentioned display may be changed. Please make it reference as an example of a display.

(7) Factor of Drive Error occurring is left displayed

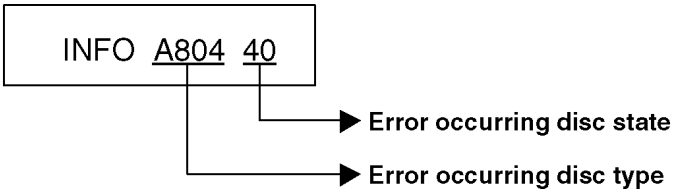

Error Occurring Disc Type

FL Display	Disc Type
00	DVD-ROM/Video
01	Audio-CD
02	2.6GB DVD-RAM
03	4.7GB DVD-RAM
04	DVD-R

Error Occurring Disc State

FL Displays (Hexadecimal)	Description			
	Disc distinction state	Cartridge disc state	Cartridge disc state	Disc size
00	OK	With cartridge	Has not been opened yet.	12 cm
10	OK	With cartridge	Has not been opened yet.	8 cm
20	OK	With cartridge	Has been opened.	12 cm
30	OK	With cartridge	Has been opened.	8 cm
40	OK	Bare	Has not been opened yet.	12 cm
50	OK	Bare	Has not been opened yet.	8 cm
60	OK	Bare	Has been opened.	12 cm
70	OK	Bare	Has been opened.	8 cm
80	NG	With cartridge	Has not been opened yet.	12 cm
90	NG	With cartridge	Has not been opened yet.	8 cm
A0	NG	With cartridge	Has been opened.	12 cm
B0	NG	With cartridge	Has been opened.	8 cm
C0	NG	Bare	Has not been opened yet.	12 cm
D0	NG	Bare	Has not been opened yet.	8 cm
E0	NG	Bare	Has been opened.	12 cm
F0	NG	Bare	Has been opened.	8 cm

9 Self-Diagnosis and Special Mode Setting

9.1. Self-Diagnosis Functions

Self-Diagnosis Function provides information for errors to service personnel by “Self-Diagnosis Display” when any error has occurred.

U, H** and F** are stored in memory and held.**

You can check latest error code by transmitting [0] [1] of Remote Controller in Service Mode.

Automatic Display on FL will be cancelled when the power is turned off or AC input is turned off during self-diagnosis display is ON.

Error Code	Diagnosis contents	Description	Monitor Display	Automatic FL display
U30	Remote control code error	Display appears when main unit and remote controller codes are not matched.	No display	REMOTE DVD* “*” is remote controller code of the main unit. Display for 5 seconds.
U59	Abnormal inner temperature detected	Display appears when the drive temperature exceeds 70°C. The power is turned off forcibly. For 30 minutes after this, all key entries are disabled. (Fan motor operates at the highest speed for the first 5 minutes. For the remaining 25 minutes, fan motor is also stopped.) The event is saved in memory as well.	No display	U59 “U59 is displayed for 30 minutes.
U99	Hang-up	Displayed when communication error has occurred between Main microprocessor and Timer microprocessor.	No display	U99 Displayed is left until the [POWER] key is pressed.
F00	No error information	Initial setting for error code in memory (Error code Initialization is possible with error code initialization and main unit initialization.)	No display	No display
F58	Drive hardware error	When drive unit error is detected, the event is saved in memory.	No display	No display
F34	Initialization error when main microprocessor is started up for program recording	When initialization error is detected after starting up main microprocessor for program recording, the power is turned off automatically. The event is saved in memory.	No display	No display
UNSUPPORT	Unsupported disc error	*An unsupported format disc was played, although the drive starts normally. *The data format is not supported, although the media type is supported. *Exceptionally in case of the disc is dirty.	**“This disc is incompatible.”**	UNSUPPORT Display for 5 seconds.
NO READ	Disc read error	*A disc is flawed or dirty. *A poor quality failed to start. *The track information could not be read.	**“Cannot read. Please check the disc.”**	NOREAD
HARD ERR	Drive error	The drive detected a hard error.	“**DVD drive** error.”	Display for 5 seconds. HARD ERR
SELF CHECK	Restoration operation	Since the power cord fell out during a power failure or operation, it is under restoration operation. *It will OK, if a display disappears automatically. If a display does not disappear, there is the possibility that defective Digital P.C.B. / RAM drive.	No display	SELF CHECK
Full Program	16 programs are already set.	16 programs are already set.	No display	PROG FULL
UNFORMAT	Unformatted disc error	You have inserted an unformatted DVD-RAM or DVD-RW that is unformatted or recorded on other equipment.	Format This disc is not formatted properly. Format the disc in DISK MANAGEMENT?	UNFORMAT

Error Code	Diagnosis contents	Description	Monitor Display	Automatic FL display
PLEASE WAIT	Unit is in termination process	Unit is in termination process now. “BYE” is displayed and power will be turned off. In case “Quick Start” of setup menu is ON, it is displayed in restoration operation for AC off.	No display	PLEASE WAIT

9.2. Special Modes Setting

Item		FL display	Key operation
Mode name	Description		Front Key
TEST Mode	*All the main unit´s parameters (include tuner) are initialized.	TEST AV1	Press [STOP], [CH UP] and [OPEN/CLOSE] keys simultaneously for five seconds when power is off.
Rating password	The audiovisual level setting password is initialized to “Level 8”.	INIT	Open the tray, and press [REC] and [PLAY] simultaneously for 5 seconds. **NOTE:** Drive should be selected to DVD.
Service Mode	Setting every kind of modes for servicing. *Details are described in “**9.3. Service Mode**”.	SERVICE MODE	When the power is off, press [CH UP], [OPEN/CLOSE] and [REC] keys simultaneously for 5 seconds.
Forced disc eject	Removing a disc that cannot be ejected. The tray will open and unit will shift to P-off mode. *When Timer REC is ON or EXT-LINK is ON, execute " Forced disc eject " after releasing Timer REC or EXT-LINK. *This command is not effective during "Child lock" is ON. While Demonstration Lock is being set, this Forced disc eject function is not accepted. If this command was executed while TIMER REC is being set, TIMER REC setting will turn to OFF.	The display before execution leaves. **********	When the power is off, press [STOP] and [CH UP] keys simultaneously for 5 seconds.
Child lock/unlock	Set or release “Child Lock”.	X HOLD	Press [ENTER] and [RETURN] by remote controller simultaneously until [X-HOLD] is displayed.
NTSC/PAL system select	To switch PAL/NTSC alternately.	The display before execution leaves. **********	While the power is on (E-E mode), press [STOP] and [OPEN/CLOSE] simultaneously for 5 seconds.
Forced power-off	When the power button is not effective while power is ON, turn off the power forcibly. *When Timer REC is ON or EXT-LINK is ON, execute “Forced Power-off” after releasing Timer REC or EXT-LINK.	Display in P-off mode.	Press [Power] key over than 10 seconds.
Aging	Perform sequence of modes as * Aging Description shown below continually. **Caution:** **All programs in DVD-RAM disc will be deleted because Formatting is done once in Aging process.**	Display following the then mode.	When the power is ON, press [STOP], [POWER] and [OPEN/CLOSE] simultaneously for over 5 seconds and less than 10 seconds. **NOTE1:** If Unit has not turned into Aging mode by operations shown above, execute TEST MODE once and re-execute operation shown above. (*All the main unit’s parameters include tuner are initialized by TEST mode.) **NOTE2:** If the unit has hung-up because of pressing keys for over 10 seconds, once turn off the power, and re-execute this command. *When releasing Aging mode, press [POWER] key.

Item		FL display	Key operation
Mode name	Description		Front Key
Aging Contents (Example): Format→REC→STOP→PLAY→CUE→REV→PLAY→PAUSE→SLOW→R-SLOW→PLAY→STOP→OPEN→CLOSE * *XP mode ・・・・・repeat twice SP mode ・・・・・repeat 4 times LP mode ・・・・・repeat 8 times EP mode ・・・・・repeat 12 times			
Demonstration lock/unlock	Ejection of the disc is prohibited. The lock setting is effective until unlocking the tray and not released by "Main unit initialization" of service mode.	*When lock the tray. LOCK "LOCK" is displayed for 3 seconds.	When the power is on, press [STOP] and [POWER] keys simultaneously for 5 seconds.
		*When unlock the tray. UNLOCK "UNLOCK" is displayed for 3 seconds.	When the power is on, press [STOP] and [POWER] keys simultaneously for 5 seconds.
		*When press OPEN/CLOSE key while the tray being locked. LOCK Display "LOCK" for 3 seconds.	Press [OPEN/CLOSE] key while the tray being locked.
ATP re-execution	Re-execute ATP.	Display at ATP executing. **********	When the power is on (E-E mode), press [CH UP] and [CH DOWN] simultaneously for 5 seconds.
Progressive initialization	The progressive setting is initialized to Interlace.	The display before execution leaves. **********	When the power is on (E-E mode), press [STOP] and [PLAY] simultaneously for 5 seconds.

9.3. Service Modes

Service mode setting: While the power is off, press **REC, CH UP and OPEN / CLOSE** simultaneously for five seconds.

Item		FL display	Key operation
Mode name	Description		(Remote controller key)
Release Items	Item of Service Mode executing is cancelled.	SERVICE MODE	Press [0] [0] or [Return] in service mode.
Error Code Display	Last Error Code of U/H/F held by Timer is displayed on FL. *Details are described in **"9.1. Self-Diagnosis Functions".**	♣□□ *♣ shows U/H/F. □□ shows number.	Press [0] [1] in service mode
ROM Version Display	Region code, MAIN firm version, TIMER firm version and DRIVE firmware versions are displayed on FL for five seconds per each version in order, but ROM version will be left displayed.	REGION* MAIN ****** TIMER****** DRIVE **** ROM * *** "*" are version displays.	Press [0] [2] in service mode
White Picture Output	White picture is output as component Output from AV Decoder. *White picture (Saturation rate : 100%) *It is enable to switch Interlace/Progressive by "I/P switch: [1] [4]"	*Initial mode is "Interlace". WHIT I	Press [1] [1] in service mode.
		Switch Interlace/Progressive WHIT P	Press [1] [4] in White Picture Output mode. *I/P are switched alternately.
Magenta Picture Output	Magenta picture is output with Component Output from AV Decoder. *Magenta picture (Saturation rate: 100%) *It is enable to switch Interlace/Progressive by "I/P switch: [1] [4]"	*Initial mode is "Interlace". MAGE I	Press [1] [2] in service mode.
		Switch Interlace/Progressive MAGE P	Press [1] [4] in Magenta Picture Output mode. *I/P are switched alternately.
RTSC Return in XP (A & V)	AV1 input signal is encoded (XP), decoded (XP) and output decoded signal to external without DISC recording and DISC playback.	Initial mode: EE2/ Interlace/ XP/ Audio 48kHz EE2 I XP 48	Press [1] [3] in service mode.
		Switch Interlace/Progressive EE2 P XP 48	Press [1] [4] in RTSC Return XP mode. *I/P are switched alternately.
		Audio 44.1 kHz/ 48 kHz Switch EE2 P XP 44	Press [2] [4] in RTSC Return XP mode. *48 kHz / 44.1 kHz are switched alternately.
I/P Switch	Switch Interlace and Progressive in EE mode. *Initial setting is "Interlace". *This command is effective during executing "White Picture Output", "Magenta Picture Output" and "RTSC Return in XP (A & V)" modes.	Initial mode is Interlace SERVICE I Switch Interlace/Progressive SERVICE P	Press [1] [4] in I/P Switch mode. *I/P are switched alternately.

Item		FL display	Key operation
Mode name	Description		(Remote controller key)
Audio Mute (XTMUTE)	Check whether mute is applied normally by the timer microprocessor.	TIMER MUTE	Press [2] [1] in service mode.
Audio Mute (XDMUTE)	Check whether mute is applied normally by the Digital P.C.B..	MAIN MUTE	Press [2] [2] in service mode.
Audio Pattern Output	The audio pattern stored in the internal memory is output (Lch: 1kHz/-18dB) (Rch: 400Hz/-18dB) *Audio sound clock switching operation of DAC can be confirmed by sub command [2] [4].	Initial mode (Audio 48kHz) AUDIO 48	Press [2] [3] in service mode.
		Audio 44.1kHz/48kHz switching AUDIO 44	Press [2] [4] in Audio Pattern Output mode. *48 kHz / 44.1 kHz are switched alternately.
Laser Used Time Indiction	Check laser used time (hours) of drive.	LASER*****	Press [4] [1] in service mode.
		I(*****) is the used time display in hour. ILaser used time of DVD/ CD in Playback/Recording mode is counted.	
Delete the Laser Used Time	Laser used time stored in the memory of the unit is deleted.	CLR LASER	Press [9] [5] in service mode.
RAM Drive Last Error	RAM Drive error code display. *For details about the drive error code, refer to the Service Manual for the specific RAM Drive. *Details are described in "**8. Service Explorer**".	1. Error Number is displayed for 5 seconds. NO **	Press [4] [2] in service mode. When "INFO******" is being displayed, past 19 error histories can be displayed by pressing [0] [1] - [1] [9]
		2. Time when the error has occurred is displayed for 5 seconds. YMMDDhhmmss Y: Year MM: Month DD: Day hh: Hour mm: Minute ss: Second	
		3. Last Drive Error (1/2) is displayed for 5 seconds. ******	
		4. Last Drive Error (2/2) is displayed for 5 seconds. ********	
		5. Error occurring Disc type is displayed for 5 seconds. MEDIA******	
		6. Disc Maker ID is displayed for 5 seconds. **********	In case that the maker cannot be identified, display is black out.
		7. Factor of Drive Error occurring is left displayed INFO*******	
Delete the Last Drive Error	Delete the Last Drive Error information stored on the DVD RAM-Drive.	CLR DRIVE	Press [9] [6] in service mode.

Item		FL display	Key operation
Mode name	Description		(Remote controller key)
Turn on all FL/LEDs	All segments of FL and all LEDs are turned on.	All segments are turned on.	Press [5] [1] in service mode.
PB HIGH Signal Output	8 pin of AV 1 Jack (PB HIGH terminal) is High (approx. 11V DC).	PB8 HIGH	Press [5] [2] in service mode.
PB MIDDLE Signal Output	8 pin of AV 1 Jack (PB HIGH terminal) is Middle (approx. 5.5V DC).	PB8 MIDDLE	Press [5] [3] in service mode.
Front connection inspection	Press all front keys and check the connection between Main P.C.B. and Front key Switches.	000Γ (1) ** (2) (1) Each time a key is pressed, segment turned on increases one by one. (2) Total umber of keys that have been pressed.	Press [5] [4] in service mode.
Production Date Display	Display the date when the unit was produced.	PD YYYYMMDD YYYY: Year MM: Month DD: Day	Press [6] [1] in service mode.
Display the accumlated working time	Display the accumulated unit´s working time.	********** S (Indicating unit: Second)	Press [6] [4] in service mode.
Display the Error History	Display the Error History stored on the unit.	Display reason of error for 5 seconds. FTREC*** Display the time when the error has occurred for 5 seconds.. YYMMDDHHMM YY: Year MM: Month DD: Day HH: Hour MM: Minute Accumulated working time till occuring of the error is left displayed. ********** S (Indicating unit: Second)	Press [6] [5] in service mode. Then press [0] [1] ~ [1] [9], the past 19 error histories are displayed.
Delete the Error History	Delete Error History information stored on the unit.	CLR FTREC	Press [9] [7] in service mode.
AV4(V) / AV1(RGB) I/O Setting	Set input to AV4 (V) and set output to AV1 (RGB) for I/O checking	AV4V-AV1RGB	Press [8] [0] in service mode.
AV2(Y/C) / AV1(V) I/O Setting	Set input to AV2 (Y/C) and set output to AV1 (V) for I/O checking	AV2YC-AV1V	Press [8] [1] in service mode.
AV2(V) / AV1(Y/C) I/O Setting	Set input to AV2 (V) and set output to AV1 (Y/C) for I/O checking	AV2V-AV1 YC	Press [8] [2] in service mode.
AV2(RGB) / AV1(V) I/O Setting	Set input to AV2(RGB) and set output to AV1(V) for I/O checking	AV2RGB-AV1V	Press [8] [3] in service mode.

Item		FL display	Key operation
Mode name	Description		(Remote controller key)
P50(H) Output	Timer Microprocessor IC7501-83 output High signal for AV1-pin 10 passing through inverter (approx. 0V DC at AV1-pin 10).	P50 HIGHOUT When OK. P50 HIGH OK When NG. P50 HIGH NG	Press [8] [4] in service mode.
P50(L) Output	Timer Microprocessor IC7501-83 output Low signal for AV1-pin 10 passing through inverter (approx. 4.4V DC at AV1-pin 10).	P50 LOW OUT When OK. P50 LOW OK When NG. P50 LOW NG	Press [8] [5] in service mode.
Tray OPEN/CLOSE Test	The RAM drive tray is opened and closed repeatedly.	NO******** "*" is number of open/close cycle times.	Press [9] [1] in service mode *When releasing this mode, press the [POWER] button of Remote Controller more than 10 seconds.
Error code initialization	Initialization of the last error code held by timer (Write in F00)	CLR E-CODE	Press [9] [8] in service mode.
Initialize Service	Last Drive Error, Error history and Error Codes stored on the unit are initialized to factory setting.	CLR SERV	Press [9] [9] in service mode.
Finishing service mode	Release Service Mode.	Display in STOP (E-E) mode. **********	Press power button on the front panel or Remote controller in service mode.

10 Assembling and Disassembling

Caution:
Original screws should be used.

10.1. Disassembly Flow Chart

The following chart is the procedure for disassemblin g the casing and inside parts for internal inspection when carrying out the servicing.

To assemble the unit, reverse the steps shown in the chart below.

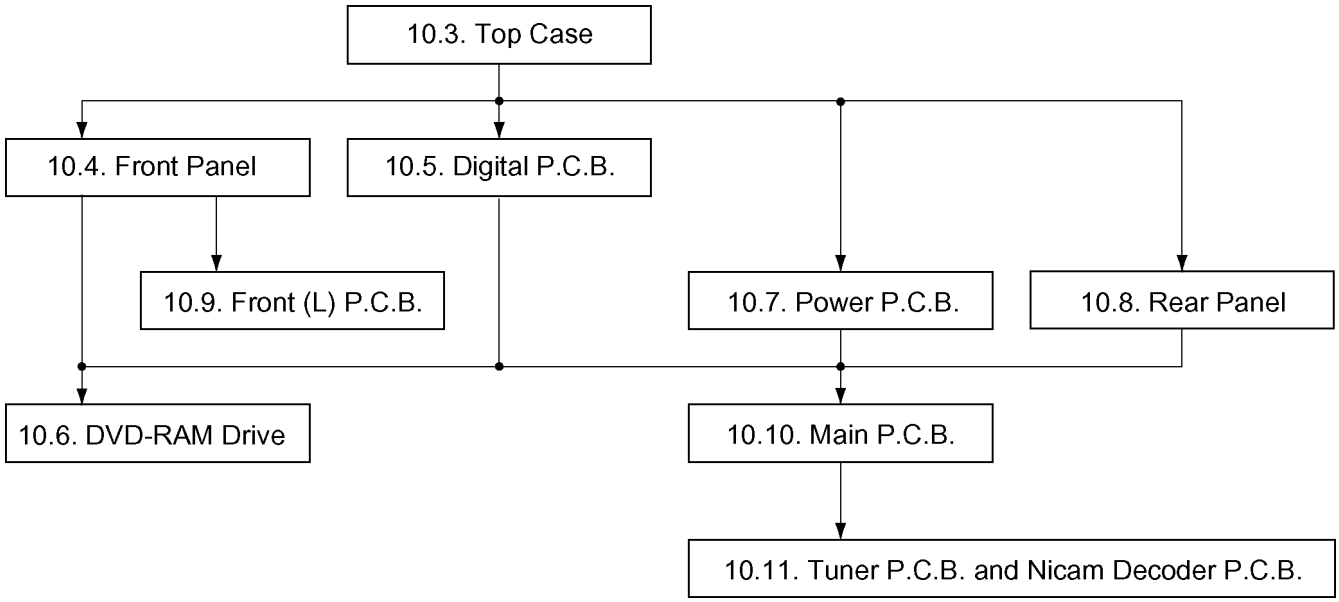

10.2. P.C.B. Positions

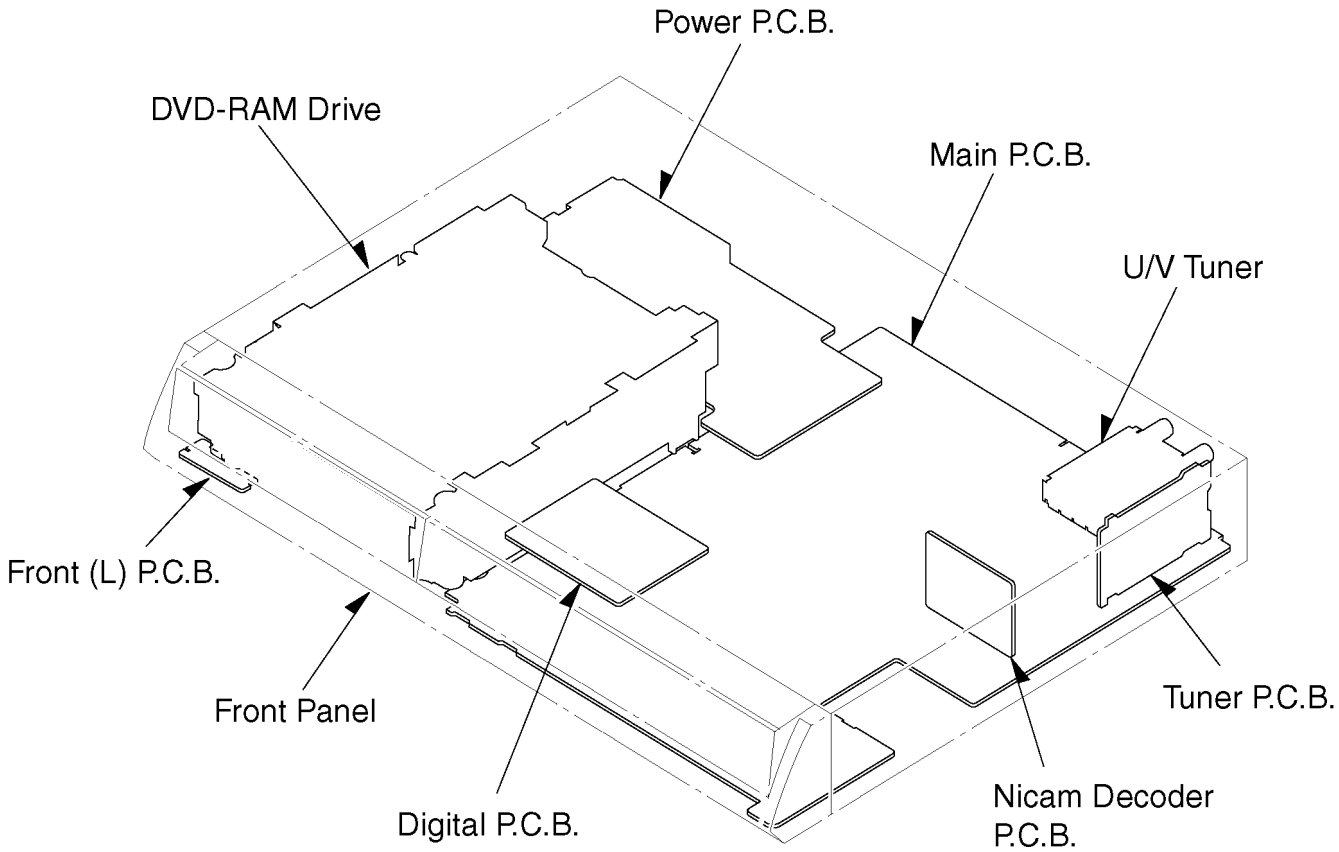

10.3. Top Case

1. Remove the 2 screws (A) and 3 screws (B).
2. Slide Top Case rearward and open the both ends at rear side of the Top Case a little and lift the Top Case in the direction of the arrows.

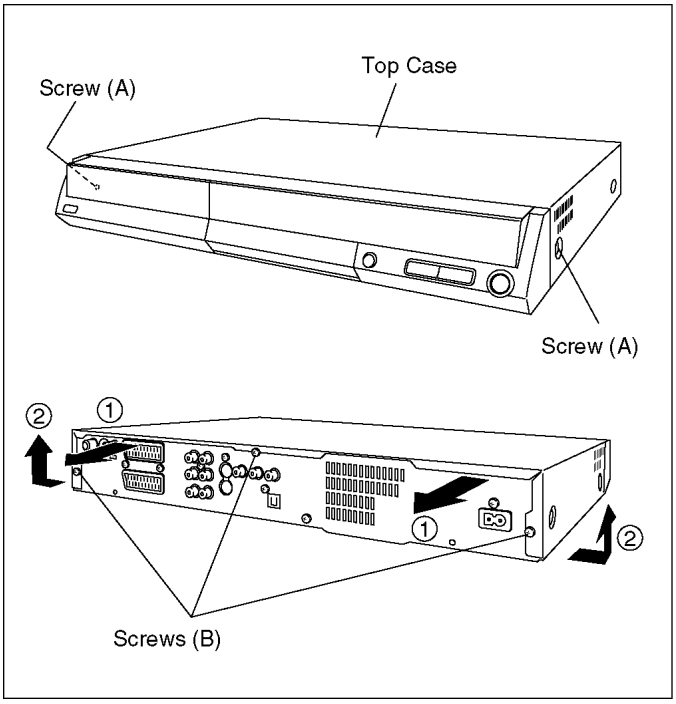

10.4. Front Panel

1. Unlock 2 tabs (A) and 3 tabs (B) in this order to remove Front Panel.

   (The tab (A) and (B) should be unlocked at the same time, respectively.)

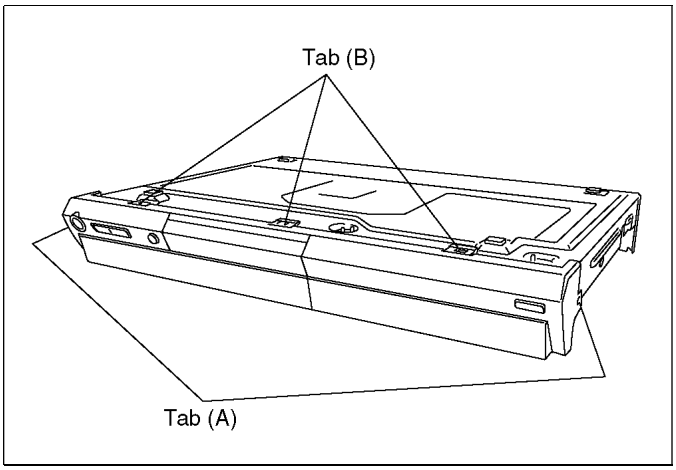

10.5. Digital P.C.B.

1. Remove FFC and a Screw (A).
2. Lift up Digital P.C.B. slightly so to disconnect Connector to remove Digital P.C.B.

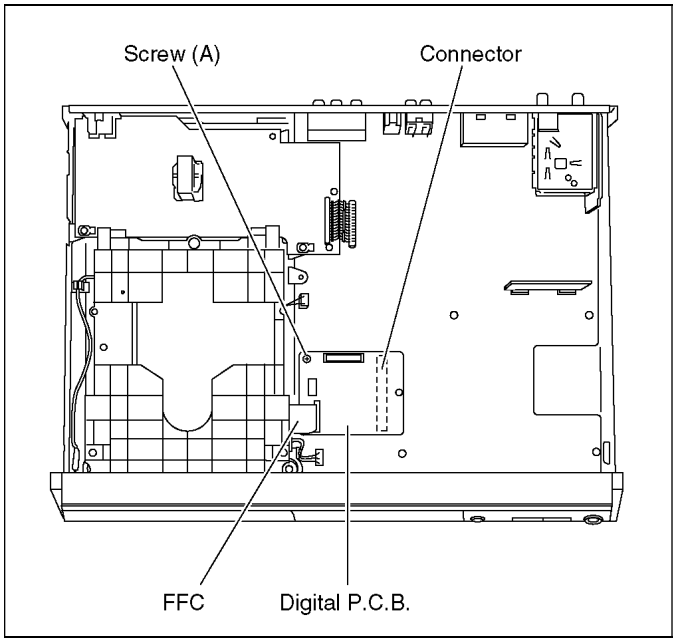

CAUTION 1:

When replacing Digital P.C.B., pay attention as below.

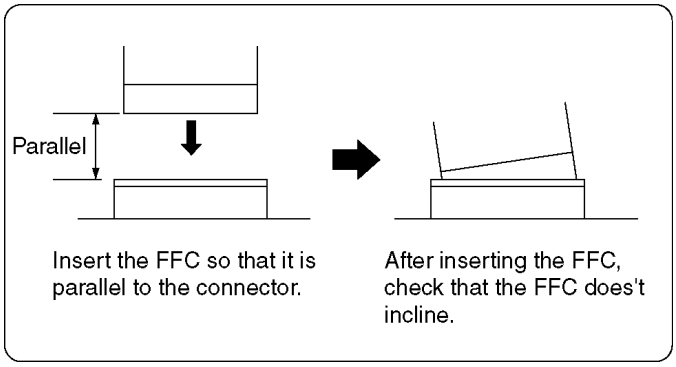

10.6. DVD-RAM Drive

1. Remove 3 Screws (A) to remove DVD-RAM Drive.
2. Lift up DVD-RAM Drive slightly and remove FFC and remove Cable between DVD-RAM Drive and Main P.C.B.

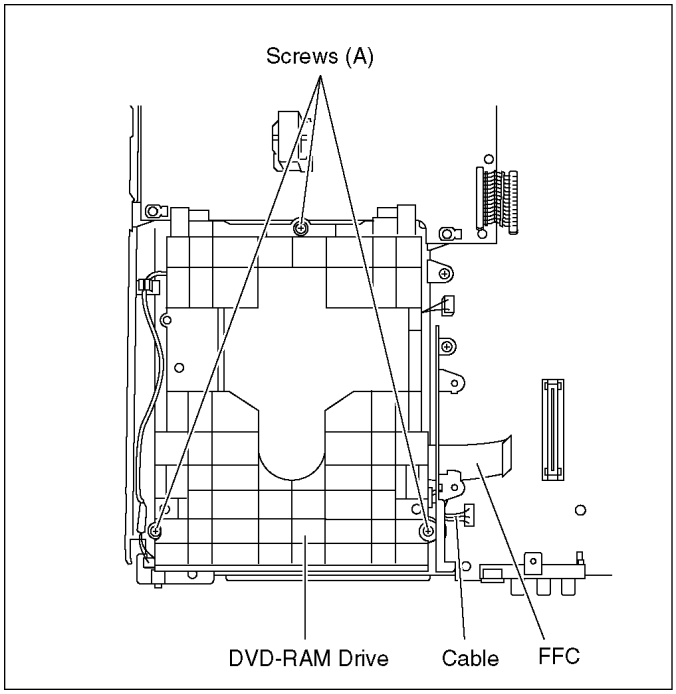

10.7. Power P.C.B.

1. Remove Screw (A).

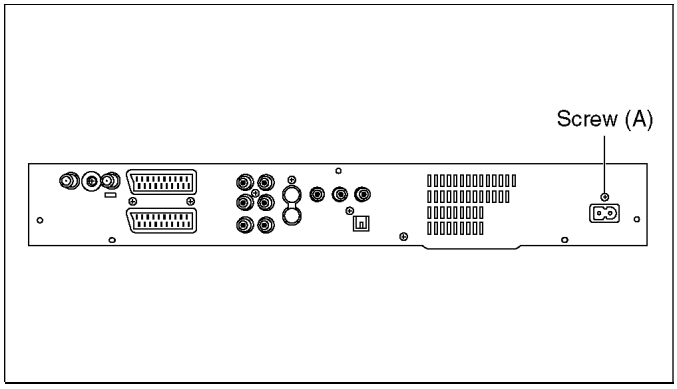

2. Remove 3 Screws (B) and disconnect Connector (A).
3. Unlock Power P.C.B. from a Flange to remove Power P.C.B.

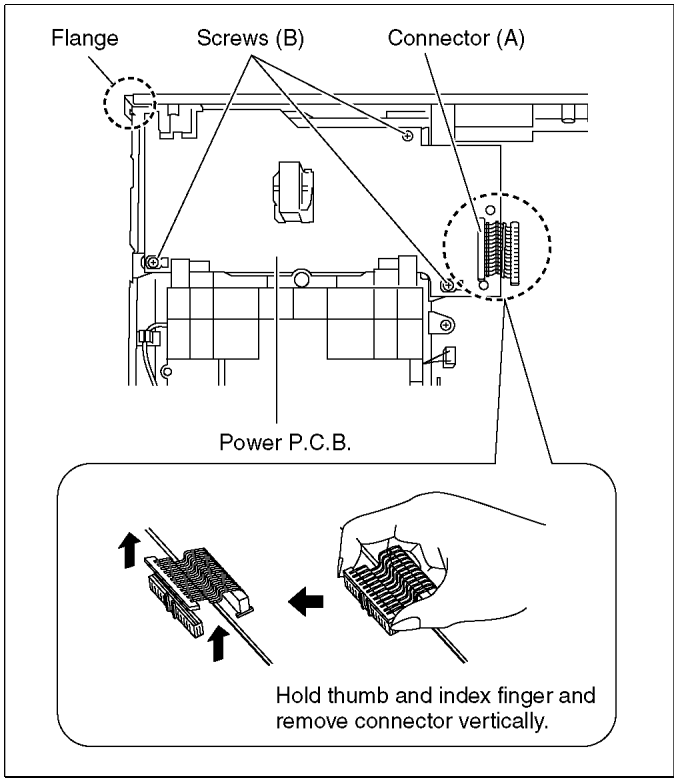

10.8. Rear Panel

1. Remove 7 Screws (A), and Screw (B).

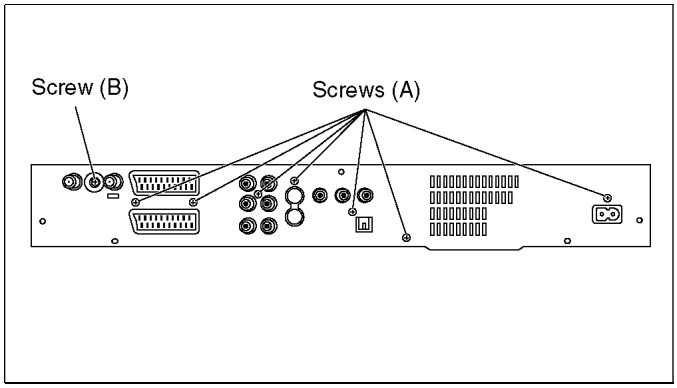

2. Unlock 2 Locking Tabs (A) to remove Rear Panel.

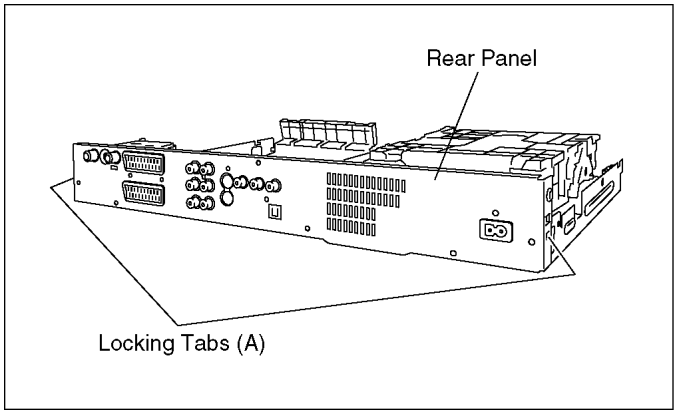

10.9. Front (L) P.C.B.

1. Remove a Screw (A) to remove Front (L) P.C.B.

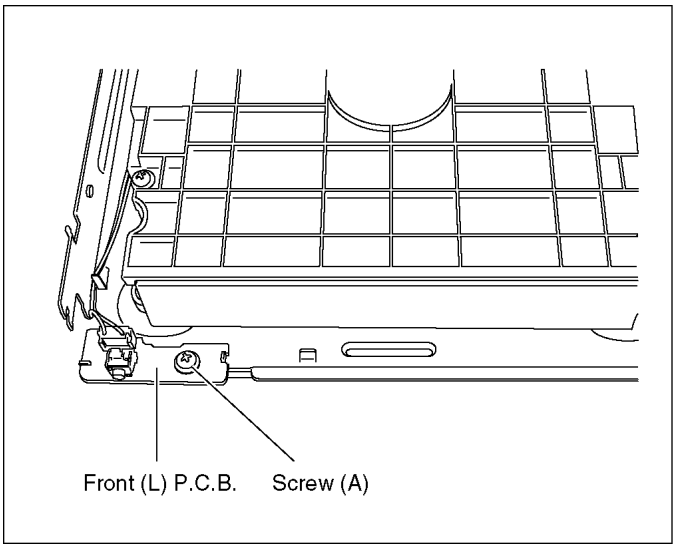

10.10. Main P.C.B.

1. Disconnect Connector (A) for Front (L) P.C.B.
2. Remove 9 Screws (A).
3. Remove Power P.C.B. Angle, Digital P.C.B. Angle and disconnect Connector (A) to remove Main P.C.B.

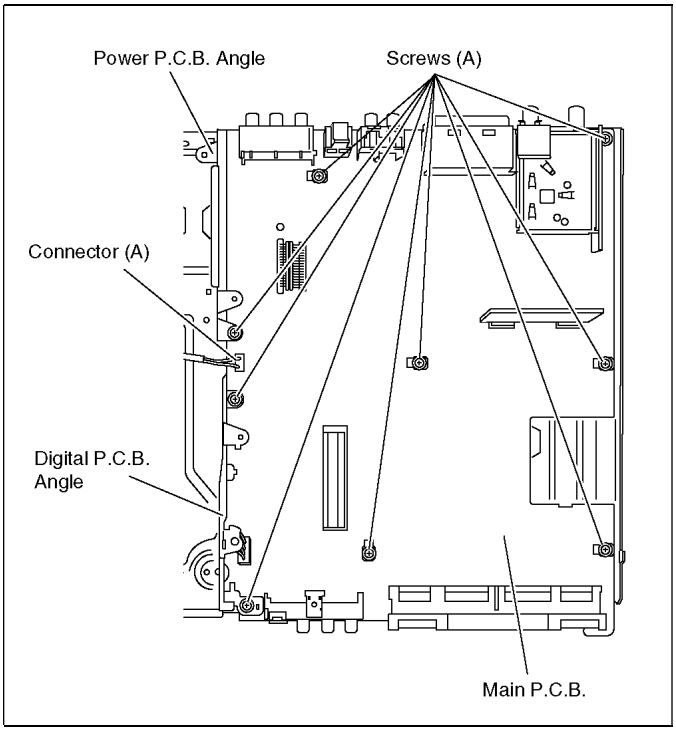

10.11. Tuner P.C.B. and Nicam Decoder P.C.B.

1. Pull out the Tuner P.C.B. in the direction of the arrow.
2. Remove the solders and pull out the Nicam Decoder P.C.B.

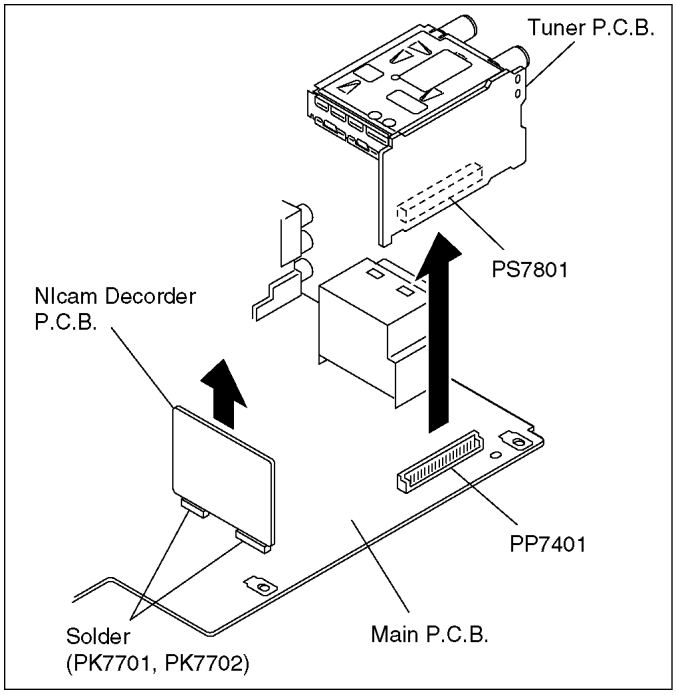

11 Service Fixture and Tools

Part Number	Description	Compatibility
RFKZ0125	Extension FFC (Digital P.C.B. - DVD-RAM Drive / 40 Pin)	Same as E50/ E55 series
RFKZ0126	Extension Cable (Main P.C.B. - DVD-RAM Drive/ 4 Pin)	Same as E30/HS2 series
RFKZ0216	Extension Cable (Main P.C.B. - Power P.C.B. / 23 Pin)	Same as E55 series
RFKZ0260	Extension Cable (Main P.C.B. - Digital P.C.B. / 88 Pin)	New

12 Service Positions

Note:

For description of the disassemblin g procedure, see the section 10.

12.1. Checking and Repairing of Power P.C.B.

1. Top Case

Remove 2 Screws (A) on side

Remove 3 rear Screws (B) on rear

Remove Top Case

2. Power P.C.B.

Remove 1 Screw for AC Inlet fixing

Remove 3 Screws fixing Power P.C.B.

Remove Connector (A) to Main P.C.B.

Unlock Power P.C.B. from a Flange to remove Power P.C.B.

Connect Extension Cable between Main P.C.B. and Power P.C.B. (RFKZ0216).

Put Power P.C.B. so that it's foil side faces top.

Caution 1:
Red wire in the extension cable should be connected to (1) pin.
Caution 2:
Original screws should be used.

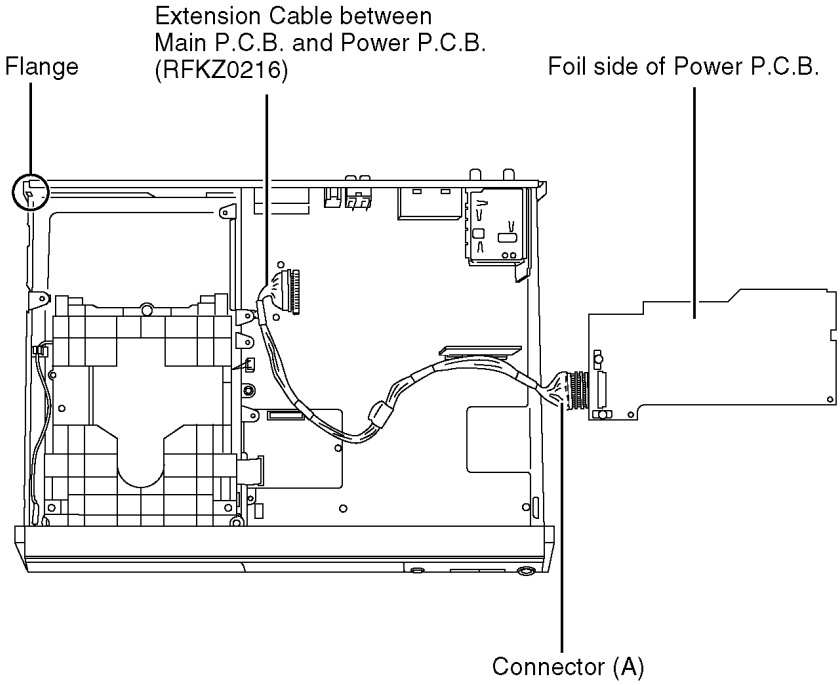

12.2. Checking and Repairing of Digital P.C.B.

1. Top Case

- Remove 2 Screws (A) on side
- Remove 3 rear Screws (B) on rear
- Remove Top Case

2. Front Panel

- Unlock 2 Locking Tabs on side
- Unlock 3 Locking Tabs on bottom
- Remove Front Panel

3. Digital P.C.B.

- Remove FFC from Digital P.C.B.
- Remove a Screw fixing Digital P.C.B.
- Lift up Digital P.C.B. to remove it

4. Digital P.C.B. Angle

- Remove 2 Screws to remove Digital P.C.B. Angle and remove FFC from DVD RAM Drive.

Remove 3 Screws fixing RAM Drive. Lift up DVD-RAM Drive slightly and connect Extension Cables between DVD-RAM Drive and Digital P.C.B. (RFKZ0125).
Connect Extension Cable between Main P.C.B. and Digital P.C.B. (RFKZ0260).

Caution 1:
Red wire in the extension cable should be connected to (1) pin.
Caution 2:
Original screws should be used.

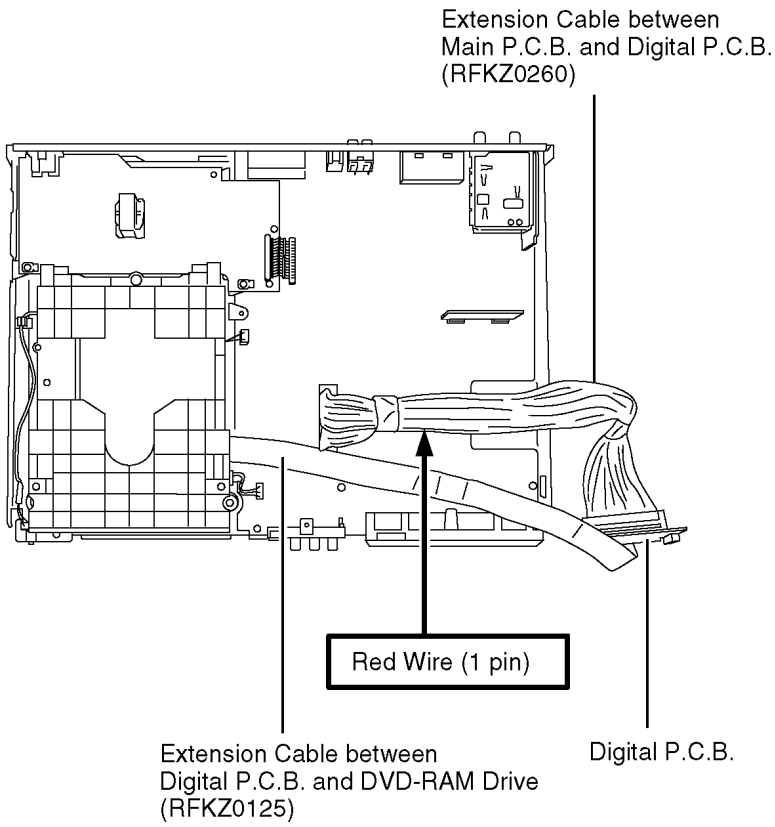

12.3. Checking and Repairing of Main P.C.B.

1. Top Case

- Remove 2 Screws (A) on side
- Remove 3 rear Screws (B) on rear
- Remove Top Case

2. Front Panel

- Unlock 2 Locking Tabs on side
- Unlock 3 Locking Tabs on bottom
- Remove Front Panel

3. Rear Panel

- Remove 8 Screws (one is for Tuner)
- Unlock 2 Locking Tabs on side
- Remove Rear Panel

4. Power P.C.B.

- Remove 3 Screws fixing Power P.C.B.
- Remove Connector (A) to Main P.C.B.
- Unlock Power P.C.B. from a Flange to remove Power P.C.B.

5. Digital P.C.B.

- Remove FFC from Digital P.C.B.
- Remove a Screw fixing Digital P.C.B.
- Lift up Digital P.C.B. to remove it

6. Digital P.C.B. Angle

- Remove 2 Screws to remove Digital P.C.B. Angle, and remove FFC from DVD RAM Drive.

7. DVD-RAM Drive

- Remove Cable between RAM Drive and Main P.C.B.
- Remove 3 Screws fixing RAM-Drive
- Lift up DVD-RAM Drive to remove it

8. Main P.C.B.

- Remove a Screw to remove Front (L) P.C.B.
- Unlock Clamper for Main-Front (L) Cable
- Remove a Screw to remove Power P.C.B. Angle
- Remove 6 Screws to remove Main P.C.B.

Attach Digital P.C.B. on to Main P.C.B.
Connect Extension Cables between Main P.C.B. and DVD-RAM Drive (RFKZ0126), betweenDigital P.C.B. and DVD-RAM Drive (RFKZ0125), and between Main P.C.B. and Power P.C.B. (RFKZ0216)

Caution 1:
Red wire in the extension cable should be connected to (1) pin.
Caution 2:
Original screws should be used.

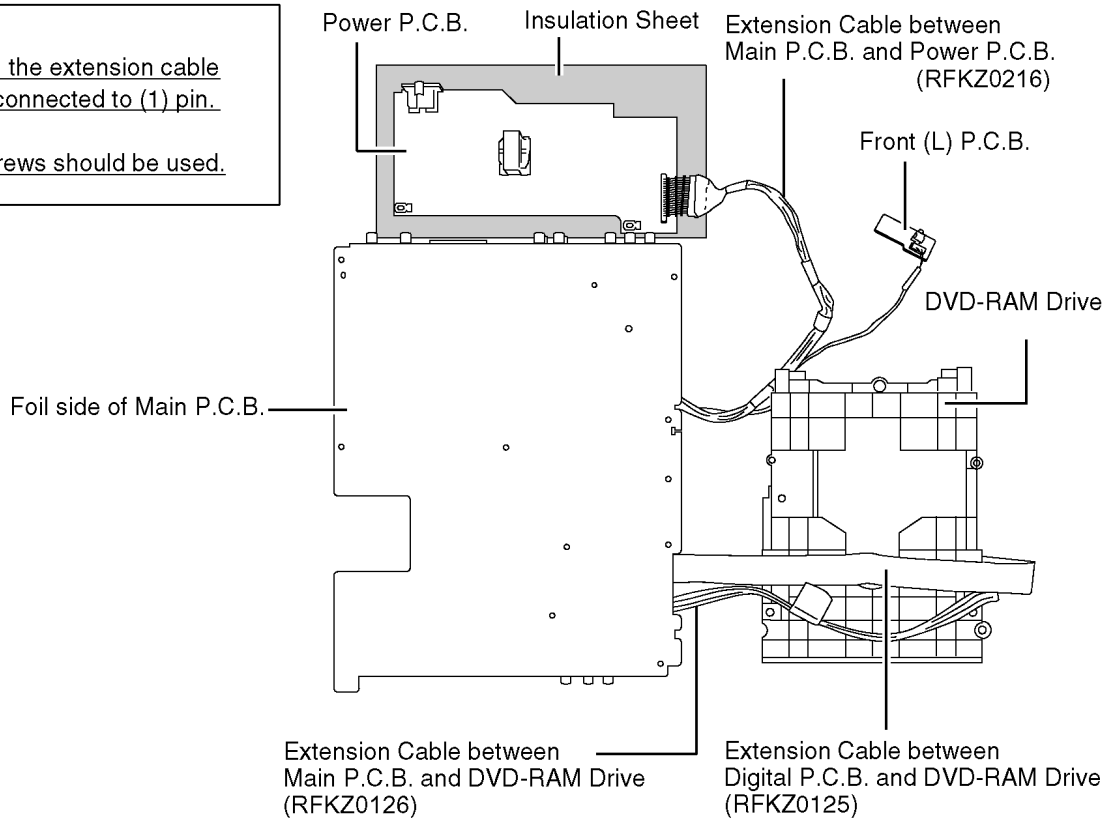

12.4. Checking and Repairing of DVD-RAM Drive

1. Top Case

- Remove 2 Screws (A) on side
- Remove 3 rear Screws (B) on rear
- Remove Top Case

2. Front Panel

- Unlock 2 Locking Tabs on side
- Unlock 3 Locking Tabs on bottom
- Remove Front Panel

3. DVD-RAM Drive

- Remove 3 Screws fixing RAM Drive
- Remove FFC from Digital P.C.B.
- Remove Cable between DVD-RAM Drive and Main P.C.B.
- Lift up DVD-RAM Drive to remove it
- Remove FFC from DVD-RAM Drive

Put DVD-RAM Drive on side.
Connect Extension Cables between Main P.C.B. and DVD-RAM Drive (RFKZ0126), and between Digital P.C.B. and DVD-RAM Drive (RFKZ0125).

Caution :
Original screws should be used.

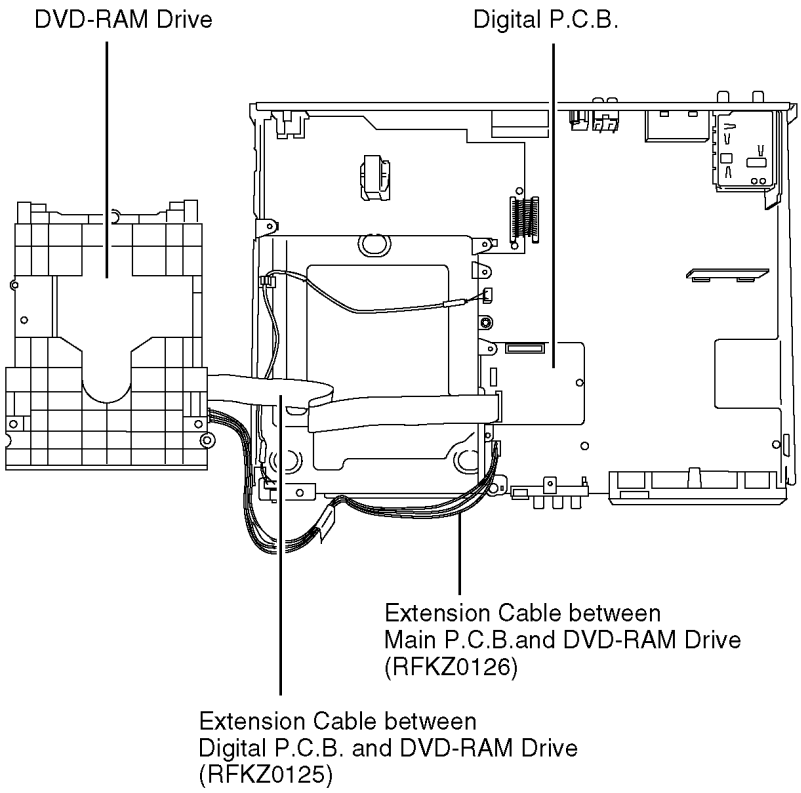

13 Caution after replacing parts

13.1. After replacing the RAM Drive with new one

After replacing RAM drive unit, TEST mode is not necessary. Please confirm operation for RAM drive

13.2. When the unit does not operate normally after replacing the Timer Microprocessor or Main P.C.B.

When the unit does not operate normally after replacing the Timer Microprocessor or Main P.C.B. with new one, reset Timer Microprocessor.

Step	Operation	Descriptions
1	While power is ON, short IC7502-4 pin (RESET) and the GND momentarily.	"RESET (L)" is transmitted to the XRESET of Timer Microprocessor (IC7501-11 pin), then the unit operates normally.

14 Standard Inspection Specifications after Making Repairs

After making repairs, we recommend performing the following inspection, to check normal operation.

No.	Procedure	Item to Check
1	Turn on the power, and confirm items pointed out.	Items pointed out should reappear.
2	Insert RAM disc.	The Panasonic RAM disc should be recognized.
3	Enter the EE (TU IN / AV IN - AV OUT) mode.	No abnormality should be seen in the picture, sound or operation.
4	Perform auto recording and playback for one minute using the RAM disc.	No abnormality should be seen in the picture, sound or operation. *Panasonic DVD-RAM disc should be used when recording and playback.
5	If a problem is caused by a VCD, DVD-R, DVD-Video, Audio-CD, or MP3, playback the test disc.	No abnormality should be seen in the picture, sound or operation.
6	After checking and making repairs, upgrade the firmware to the latest version.	Make sure that [FIRM_SUCCESS] appears in the FL displays. *[UNSUPPORT] display means the unit is already updated to newest same version. Then version up is not necessary.
7	Transfer [9][9] in the service mode setting, and initialize the service settings (return various settings and error information to their default values. The laser time is not included in this initialization).	Make sure that [CLR SERV] appears in the FL display. After checking it, turn the power off.
8	When replacing of RAM drive, transfer [9] [5] in the service mode setting to delete Laser used time.	Make sure that [CLR LASER] appears in the FL display. After that, turn power off.

Use the following checklist to establish the judgement criteria for the picture and sound.

Item	Contents	Check	Item	Contents	Check
Picture	Block noise		Sound	Distorted sound	
	Crosscut noise			Noise (static, background noise, etc.)	
	Dot noise			The sound level is too low.	
	Picture disruption			The sound level is too high.	
	Not bright enough			The sound level changes.	
	Too bright				
	Flickering color				
	Color fading				

15 Voltage and Waveform Chart

Note)

Circuit voltage and waveform described herein shall be regarded as reference information when probing defect point, because it may differ from an actual measuring value due to difference of Measuring instrument and its measuring condition and product itself.

15.1. Power P.C.B.

Ref No.	IC1150										IC1200									
MODE	1	2	3	4	5	6	7	8	9		1	2	3							
REC	3.0	1.5	0	11.6	0	-	310	-	-1523		8.3	2.5	0							
PLAY	3.0	1.5	0	11.6	0	-	310	-	-1523		8.3	2.5	0							
STOP	3.0	1.5	0	11.6	0	-	310	-	-1538		8.3	2.5	0							
Ref No.	IC1400									IC1401										
MODE	1	2	3	4	5	6	7	8		1	2	3	4	5						
REC	12.4	0	1.4	4.3	0	0.9	0.8	1.1		5.6	4.9	5.2	2.7	0						
PLAY	12.4	0	1.4	4.3	0	0.9	0.8	1.1		5.6	4.9	5.2	2.7	0						
STOP	12.4	0	1.4	4.3	0	0.9	0.8	1.1		5.6	4.9	5.2	2.7	0						
Ref No.	IC1601									IC1701										
MODE	1	2	3	4	5	6	7	8		1	2	3	4	5	6	7	8			
REC	12.3	4.5	1.2	1.3	0.8	0	7.6	12.3		12.4	4.5	1.2	1.3	0	0	8.5	12.4			
PLAY	12.3	4.5	1.2	1.3	0.8	0	7.6	12.3		12.4	4.5	1.2	1.3	0	0	8.5	12.4			
STOP	12.3	4.5	1.2	1.3	0.8	0	7.6	12.3		12.4	4.5	1.2	1.3	1.2	0	8.5	12.4			
Ref No.	Q1200					Q1270														
MODE	1	2	3	4		1	2	3	4	5	6	7	8							
REC	9.3	8.3	0	1.5		12.4	12.4	12.4	6.2	12.4	12.4	12.4	12.4							
PLAY	9.3	8.3	0	1.5		12.4	12.4	12.4	6.2	12.4	12.4	12.4	12.4							
STOP	9.3	8.3	0	1.5		12.4	12.4	12.3	6.2	12.4	12.4	12.4	12.4							
Ref No.	Q1600									Q1700										
MODE	1	2	3	4	5	6	7	8		1	2	3	4	5	6					
REC	12.3	12.3	12.3	7.6	5.5	5.4	5.5	5.6		3.0	3.0	8.5	12.4	2.9	3.0					
PLAY	12.3	12.3	12.3	7.6	5.5	5.4	5.5	5.6		3.0	3.0	8.5	12.4	2.9	3.0					
STOP	12.3	12.3	12.3	7.6	5.6	5.6	5.6	5.6		3.0	3.1	8.5	12.4	3.0	3.0					
Ref No.	QR1301				QR1302				QR1303				QR1304				QR1800			
MODE	E	C	B		E	C	B		E	C	B		E	C	B		E	C	B	
REC	0	0	3.3		0	0.1	5.0		0	4.9	0.1		0	0	5.0		11.9	0	12.3	
PLAY	0	0	3.3		0	0.1	5.0		0	4.9	0.1		0	0	5.0		11.9	0	12.3	
STOP	0	0	3.3		0	0.1	5.0		0	4.9	0.1		0	0	5.0		11.9	0	12.3	
Ref No.	QR1801																			
MODE	E	C	B																	
REC	0	4.5	0																	
PLAY	0	4.5	0																	
STOP	0	4.5	0																	

15.2. Main P.C.B.

Ref No.	IC1501									IC1502										
MODE	1	2	3	4	5	6	7	8		1	2	3	4	5	6	7	8			
REC	5.0	0	0	3.4	4.9	0	0	5.0		3.3	0	0	2.0	4.9	0	0	3.6			
PLAY	5.0	0	0	3.4	4.9	0	0	5.0		3.3	0	0	2.0	4.9	0	0	3.6			
STOP	5.0	0	0	3.4	4.9	0	0	5.0		3.3	0	0	2.0	4.9	0	0	3.7			
Ref No.	IC1504						IC1505													
MODE	1	2	3	4	5		1	2	3	4	5	6	7	8						
REC	3.6	3.2	3.3	2.6	0		3.3	0	0	1.9	4.1	0	4.6	3.6						
PLAY	3.6	3.2	3.3	2.6	0		3.3	0	0	1.9	4.1	0	4.6	3.6						
STOP	3.7	3.2	3.3	2.6	0		3.3	0	0	2.0	4.1	4.0	4.6	3.6						
Ref No.	IC1510						IC1511													
MODE	1	2	3	4	5		1	2	3	4	5	6	7	8						
REC	5.6	4.9	5.0	0	0		5.2	0	0	3.6	5.7	0	0	5.7						
PLAY	5.6	4.9	5.0	0	0		5.2	0	0	3.6	5.7	0	0	5.7						
STOP	5.6	4.9	5.0	0	0		5.2	0	0	3.6	5.7	0	0	5.7						
Ref No.	IC3001																			
MODE	1	2	3	4	5	6	7	8	9	10	11	12	13	14	15	16	17	18	19	20
REC	2.0	2.5	1.6	0	1.6	5.0	1.6	5.0	0.4	0.3	1.6	0.4	0	1.7	1.7	1.6	0.4	0	1.7	1.7
PLAY	2.0	2.5	1.6	0	1.6	5.0	1.6	5.0	0.4	0.3	1.6	0.4	0	1.7	1.7	1.6	0.4	0	1.7	1.7
STOP	2.0	2.5	1.6	0	1.6	5.0	1.6	5.0	0.4	1.6	1.6	0.4	0	1.7	1.7	1.6	0.4	0	1.7	1.7
Ref No.	IC3001																			
MODE	21	22	23	24	25	26	27	28	29	30	31	32	33	34	35	36	37	38	39	40
REC	0	1.7	1.7	1.7	5.0	1.4	0.1	1.4	0	2.1	1.6	0	1.6	0	0	0.3	1.6	0	1.6	5.0
PLAY	0	1.7	1.7	1.7	5.0	1.4	0.1	1.4	0	2.1	1.6	0	1.6	0	0	0.3	1.6	0	1.6	5.0
STOP	0	1.7	1.6	1.7	5.0	1.4	0.2	1.4	0	2.1	1.6	0	1.6	0	2.1	0.3	1.6	0	1.6	5.0
Ref No.	IC3001																			
MODE	41	42	43	44	45	46	47	48	49	50	51	52	53	54	55	56	57	58	59	60
REC	1.6	5.1	2.0	0	2.0	11.6	1.6	2.0	4.5	4.4	4.4	4.0	4.5	4.5	4.5	4.5	9.1	4.4	4.4	4.5
PLAY	1.6	5.1	2.0	0	2.0	11.6	1.6	2.0	4.5	4.4	4.4	4.0	4.5	4.5	4.5	4.5	9.1	4.4	4.4	4.5
STOP	1.6	5.1	2.0	0	2.0	11.6	1.6	2.0	4.5	4.5	4.0	4.5	4.5	4.4	3.8	3.9	9.1	4.0	4.3	3.7

Ref No.	IC3001																			
MODE	61	62	63	64	65	66	67	68	69	70	71	72	73	74	75	76	77	78	79	80
REC	4.5	4.5	4.5	4.5	9.0	0	0.9	0.9	1.4	1.4	4.5	4.5	4.5	4.5	0	4.5	9.5	4.5	4.5	0
PLAY	4.5	4.5	4.5	4.5	9.0	0	0.9	0.9	1.4	1.4	4.5	4.5	4.5	4.5	0	4.5	9.5	4.5	4.5	0
STOP	3.7	3.7	3.7	3.8	9.0	0	1.2	0.4	0.4	0.4	4.5	4.5	4.5	4.5	0.4	0.4	0.3	4.5	4.5	0

Ref No.	IC3001																			
MODE	81	82	83	84	85	86	87	88	89	90	91	92	93	94	95	96	97	98	99	100
REC	2.1	5.0	1.5	5.1	2.1	4.5	3.6	4.8	4.6	5.0	2.0	2.8	2.1	5.1	2.0	0	2.1	0	2.0	2.5
PLAY	2.1	5.0	1.5	5.1	2.1	4.5	3.6	4.8	4.6	5.0	2.0	2.8	2.1	5.1	2.0	0	2.1	0	2.0	2.5
STOP	4.7	5.0	1.5	5.1	2.1	4.5	3.6	4.8	4.6	5.1	5.0	2.8	2.1	5.1	2.0	0	2.1	0	2.0	2.5

Ref No.	IC4009									IC4011										
MODE	1	2	3	4	5	6	7	8		1	2	3	4	5						
REC	5.8	5.8	5.8	0	5.8	5.8	5.8	11.6		1.3	0	4.9	5.7	5.0						
PLAY	5.8	5.8	5.8	0	5.8	5.8	5.8	11.6		1.3	0	4.9	5.7	5.0						
STOP	5.8	5.8	5.8	0	5.8	5.8	5.8	11.6		1.3	0	4.9	5.7	5.0						

Ref No.	IC4012									IC4901						IC7401				
MODE	1	2	3	4	5	6	7	8		1	2	3	4	5		1	2	3	4	5
REC	5.8	5.8	5.8	0	5.8	5.8	5.8	11.6		0	1.6	0	2.4	5.0		12.3	4.2	11.6	2.6	0
PLAY	5.8	5.8	5.8	0	5.8	5.8	5.8	11.6		0	1.6	0	2.4	5.0		12.3	4.2	11.6	2.6	0
STOP	5.8	5.8	5.8	0	5.8	5.8	5.8	11.6		0	1.6	0	2.4	5.0		12.3	4.2	11.6	2.6	0

Ref No.	IC7402							IC7403												
MODE	1	2	3	4	5	6		1	2	3	4	5	6	7	8					
REC	5.6	0	5.6	1.8	0	5.1		5.0	0	0	2.7	4.1	0.3	0.4	5.6					
PLAY	5.6	0	5.6	1.8	0	5.1		5.0	0	0	2.7	4.1	0.3	0.4	5.6					
STOP	5.6	0	5.6	1.3	0	5.1		5.0	0	0	3.4	4.2	3.8	0	5.6					

Ref No.	IC7501																			
MODE	1	2	3	4	5	6	7	8	9	10	11	12	13	14	15	16	17	18	19	20
REC	0.3	4.9	3.8	0.8	0.8	4.4	0	0	0.7	1.2	5.0	1.4	0	2.1	3.3	4.9	3.3	3.2	3.2	3.1
PLAY	0.3	4.9	3.8	0.8	0.8	4.4	0	0	0.7	1.2	5.0	1.4	0	2.1	3.3	4.9	3.3	3.2	3.2	3.1
STOP	0.6	4.9	4.5	0.9	0.9	4.4	0	0	0.7	1.2	5.0	1.4	0	2.1	3.3	4.9	3.3	3.2	3.2	3.1

Ref No.	IC7501																			
MODE	21	22	23	24	25	26	27	28	29	30	31	32	33	34	35	36	37	38	39	40
REC	0	0	0	3.3	0	0	0	0	4.6	0	0.9	1.6	1.2	5.0	2.6	0	0	0.1	3.3	3.3
PLAY	0	0	0	3.3	0	0	0	0	4.6	0	0.9	1.6	1.2	5.0	2.6	0	0	0.1	3.3	3.3
STOP	0	0	0	3.3	0	0	0	4.8	4.6	0	0.9	1.6	1.2	5.0	2.6	0	0	0.1	3.3	3.3

Ref No.	IC7501																			
MODE	41	42	43	44	45	46	47	48	49	50	51	52	53	54	55	56	57	58	59	60
REC	0	3.3	3.2	3.3	0	0	5.0	0	4.9	4.9	4.9	0	4.9	5.1	5.0	0	0	0	0	4.9
PLAY	0	3.3	3.2	3.3	0	0	5.0	0	4.9	4.9	4.9	0	4.9	5.1	5.0	0	0	0	0	4.9
STOP	0	3.3	3.2	3.3	0	0	5.0	4.9	4.9	4.9	4.9	0	4.9	5.1	5.0	0	0	0	0	4.9

Ref No.	IC7501																			
MODE	61	62	63	64	65	66	67	68	69	70	71	72	73	74	75	76	77	78	79	80
REC	0	4.9	4.9	0	0	0	0	0	5.0	0	0	0	0	0	0	0	4.9	0	0	4.1
PLAY	0	4.9	4.9	0	0	0	0	0	5.0	0	0	0	0	0	0	0	4.9	0	0	4.1
STOP	0	4.9	4.9	0	0	0	0	0	5.0	0	0	0	0	0	0	0	4.9	0	0	4.1

Ref No.	IC7501																			
MODE	81	82	83	84	85	86	87	88	89	90	91	92	93	94	95	96	97	98	99	100
REC	0	5.0	0	0	0	0	4.9	0	0	0	0	0	4.9	0	5.0	4.9	0.6	2.3	4.7	3.2
PLAY	0	5.0	0	0	0	0	4.9	0	0	0	0	0	4.9	0	5.0	4.9	0.6	2.3	4.7	3.2
STOP	0	5.0	0	0	0	0	4.9	0	0	0	0	0	4.9	0	4.9	2.5	2.1	0.3	4.7	0

Ref No.	IC7501																			
MODE	101	102	103	104	105	106	107	108	109	110	111	112	113	114	115	116				
REC	4.9	5.0	0	5.0	5.0	5.0	5.0	5.0	5.0	1.3	0	5.0	2.0	0	0	0.5				
PLAY	4.9	5.0	0	5.0	5.0	5.0	5.0	5.0	5.0	1.3	0	5.0	2.0	0	0	0.5				
STOP	5.0	5.0	0	5.0	5.0	5.0	5.0	5.0	5.0	1.3	0	5.0	2.0	0	0	1.0				

Ref No.	IC7502						IC7503													
MODE	1	2	3	4	5		1	2	3	4	5	6	7	8						
REC	0	0	0	5.0	5.0		0	0	0	0	4.6	4.8	4.9	5.0						
PLAY	0	0	0	5.0	5.0		0	0	0	0	4.6	4.8	4.9	5.0						
STOP	0	0	0	5.0	5.0		0	0	0	0	4.6	4.7	4.9	5.0						

Ref No.	IC7504																			
MODE	1	2	3	4	5	6	7	8	9	10	11	12	13	14	15	16	17	18	19	20
REC	4.9	0	4.4	2.5	0	2.2	2.2	5.0	-27.8	-25.8	-25.7	-26.5	-25.6	-25.1	-24.7	-27.8	-24.7	5.0	-24.7	-21.6
PLAY	4.9	0	4.4	2.5	0	2.2	2.2	5.0	-27.8	-25.8	-25.7	-26.5	-25.6	-25.1	-24.7	-27.8	-24.7	5.0	-24.7	-21.6
STOP	4.9	0	4.4	0.8	0	2.2	2.2	5.0	-27.8	-27.8	-27.8	-27.8	-27.8	-27.8	-27.8	-27.8	-18.0	5.0	-15.5	-18.0

Ref No.	IC7504																			
MODE	21	22	23	24	25	26	27	28	29	30	31	32	33	34	35	36	37	38	39	40
REC	-18.5	-27.8	-27.8	-27.8	-27.8	-27.8	-27.8	-21.5	-21.5	-18.4	-21.6	-21.6	-13.3	-15.6	-9.8	-18.5	-21.6	-18.5	-11.7	-21.3
PLAY	-18.5	-27.8	-27.8	-27.8	-27.8	-27.8	-27.8	-21.5	-21.5	-18.4	-21.6	-21.6	-13.3	-15.6	-9.8	-18.5	-21.6	-18.5	-11.7	-21.3
STOP	-13.0	-18.0	-15.5	-18.2	-18.4	-18.0	-18.1	-18.1	-10.5	-13.4	-18.5	-16.5	-15.1	-16.0	-3.9	-17.8	-10.1	-12.2	-12.2	-14.2

Ref No.	IC7504																			
MODE	41	42	43	44	45	46	47	48	49	50	51	52	53	54	55	56	57	58	59	60
REC	-21.6	-21.7	-21.9	-22.4	-19.3	-13.6	-16.2	-21.9	-27.8	-27.8	-27.8	-27.8	-27.8	-27.8	-27.8	-24.7	-24.7	-24.7	-24.7	-24.7
PLAY	-21.6	-21.7	-21.9	-22.4	-19.3	-13.6	-16.2	-21.9	-27.8	-27.8	-27.8	-27.8	-27.8	-27.8	-27.8	-24.7	-24.7	-24.7	-24.7	-24.7
STOP	-16.5	-17.2	-17.2	-16.6	-14.2	-14.3	-14.7	-27.8	-27.8	-27.3	-27.8	-27.0	-26.5	-26.5	-26.5	-25.0	-23.6	-24.5	-23.6	-23.0

Ref No.	IC7504																			
MODE	61	62	63	64																
REC	-24.7	-24.7	-24.7	-28.0																
PLAY	-24.7	-24.7	-24.7	-28.0																
STOP	-22.5	-22.5	-22.4	-28.0																

Ref No.	IC7505						IC7506													
MODE	1	2	3	4	5		1	2	3	4	5									
REC	4.1	5.2	0	0	0		2.2	3.3	0	0	0									
PLAY	4.1	5.2	0	0	0		2.2	3.3	0	0	0									
STOP	4.1	5.2	0	0	0		2.2	3.3	0	0	0									

Ref No.	Q3907				Q3908				Q3909				Q3910				Q4004			
MODE	E	C	B		E	C	B		E	C	B		E	C	B		E	C	B	
REC	4.6	4.6	5.0		4.6	4.6	5.0		4.6	0.3	0		0.3	4.3	0.1		5.2	-0.9	5.2	
PLAY	4.6	4.6	5.0		4.6	4.6	5.0		4.6	0.3	0		0.3	4.3	0.1		5.2	-0.9	5.2	
STOP	4.4	4.4	4.7		4.6	4.6	5.0		4.6	0.3	0		0.1	4.6	0.1		5.2	-0.4	5.2	
Ref No.	Q4006				Q4007				Q4008				Q4009				Q7401			
MODE	E	C	B		E	C	B		E	C	B		E	C	B		E	C	B	
REC	0	0	-0.1		0	0	-0.1		0	0	-0.2		0	0	-0.2		0	11.6	0	
PLAY	0	0	-0.1		0	0	-0.1		0	0	-0.2		0	0	-0.2		0	11.6	0	
STOP	0	0	-0.1		0	0	-0.1		0	0	0.4		0	0	0		0.1	11.6	0	
Ref No.	Q7501				Q7502				Q7503				Q7504				Q7506			
MODE	E	C	B		E	C	B		E	C	B		E	C	B		E	C	B	
REC	2.7	0	2.1		2.0	5.0	1.6		2.7	0	2.1		2.0	5.0	1.6		0	5.0	0	
PLAY	2.7	0	2.1		2.0	5.0	1.6		2.7	0	2.1		2.0	5.0	1.6		0	5.0	0	
STOP	2.7	0	2.1		2.0	5.0	1.6		2.7	0	2.1		2.0	5.0	1.6		0	5.0	0	
Ref No.	Q7507				Q7508				Q7510											
MODE	E	C	B		E	C	B		E	C	B									
REC	0	4.6	0		0	4.6	0		0	29.3	0									
PLAY	0	4.6	0		0	4.6	0		0	29.3	0									
STOP	0	5.1	0.1		0	5.1	0.1		0	29.1	0									
Ref No.	QR3914				QR4002				QR4003				QR4004				QR4005			
MODE	E	C	B		E	C	B		E	C	B		E	C	B		E	C	B	
REC	0	5.0	0		0	0	4.9		0	0	2.4		0	5.2	0		0	5.2	0	
PLAY	0	5.0	0		0	0	4.9		0	0	2.4		0	5.2	0		0	5.2	0	
STOP	0	5.0	0		0	0	4.9		0	0	2.4		0	5.2	0		0	5.2	0	
Ref No.	QR7401				QR7403				QR7404				QR7501				QR7503			
MODE	E	C	B		E	C	B		E	C	B		E	C	B		E	C	B	
REC	0	4.2	0		0	0	4.9		0	0	0		0	4.5	0.3		0	3.3	0	
PLAY	0	4.2	0		0	0	4.9		0	0	0		0	4.5	0.3		0	3.3	0	
STOP	0	4.2	0		0	0	4.9		0	0	0		0	4.4	0.3		0	3.3	0	
Ref No.	QR7506				QR7507				QR7508											
MODE	E	C	B		E	C	B		E	C	B									
REC	0	0	2.2		0	0	4.1		0	0.1	0									
PLAY	0	0	2.2		0	0	4.1		0	0.1	0									
STOP	0	0	2.2		0	0	4.1		0	0.1	0									

15.3. Tuner P.C.B.

Ref No.	Q7802																			
MODE	E	C	B																	
REC	3.8	1.2	3.1																	
PLAY	3.8	1.2	3.1																	
STOP	3.8	1.2	3.1																	
Ref No.	QR7806				QR7807															
MODE	E	C	B		E	C	B													
REC	0	-0.6	0		0	0	-0.6													
PLAY	0	-0.6	0		0	0	-0.6													
STOP	0	-0.5	0		0	0	-0.4													

15.4. P9001 Connector

Ref No.	P9001																			
MODE	1	2	3	4	5	6	7	8	9	10	11	12	13	14	15	16	17	18	19	20
REC	-	-	-	1	-	3.3	3.3	3.3	0.2	3.1	-	3.3	-	3.3	2.3	3.3	5.1	-	-	-
PLAY	-	-	-	1	-	3.3	3.3	3.3	0.2	3.1	-	3.3	-	3.3	2.3	3.3	5.1	-	-	-
STOP	-	-	-	1	-	3.3	3.3	3.2	0.2	3.1	-	3.2	-	3.3	2.3	3.3	5.1	-	-	-
Ref No.	P9001																			
MODE	21	22	23	24	25	26	27	28	29	30	31	32	33	34	35	36	37	38	39	40
REC	-	-	-	-	0	-	0	-	2.5	-	2.5	-	0	0	0	1.7	0	3.3	2.5	-
PLAY	-	-	-	-	0	-	0	-	2.5	-	2.5	-	0	0	0	1.7	0	3.3	2.5	-
STOP	-	-	-	-	0	-	0	-	2.5	-	2.5	-	0	0	0	1.7	0	3.3	2.5	-
Ref No.	P9001																			
MODE	41	42	43	44	45	46	47	48	49	50	51	52	53	54	55	56	57	58	59	60
REC	2.5	3.3	0	0	0	0	1.1	5.0	0	-	1.5	5.0	0	-	1.0	3.7	0	3.7	1.1	5.7
PLAY	2.5	3.3	0	0	0	0	1.1	5.0	0	-	1.5	5.0	0	-	1.0	3.7	0	3.7	1.1	5.7
STOP	2.5	3.3	0	0	0	0	1.1	5.0	0	-	1.5	5.0	0	-	1.0	3.7	0	3.7	1.1	5.7
Ref No.	P9001																			
MODE	61	62	63	64	65	66	67	68	69	70	71	72	73	74	75	76	77	78	79	80
REC	0	5.7	1.0	5.7	0	0	0	3.3	0	3.3	0	3.3	0	3.3	0	-	0	0.3	0	-
PLAY	0	5.7	1.0	5.7	0	0	0	3.3	0	3.3	0	3.3	0	3.3	0	-	0	0.3	0	-
STOP	0	5.7	1.0	5.7	0	0	0	3.3	0	3.3	0	3.3	0	3.3	0	-	0	0.3	0	-
Ref No.	P9001																			
MODE	81	82	83	84	85	86	87	88												
REC	0	1.5	1.5	1.5	0	1.5	2.1	1.5												
PLAY	0	1.5	1.5	1.5	0	1.5	2.1	1.5												
STOP	0	1.5	1.5	1.5	0	1.5	2.1	1.5												

15.5. Waveform Chart

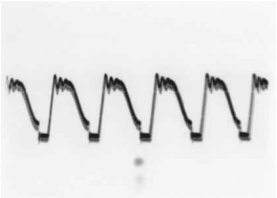 T1150-3 STOP 30Vp-p (5 μ sec.div)	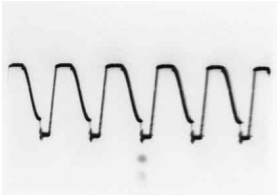 T1150-7 STOP 130Vp-p (5 μ sec.div)	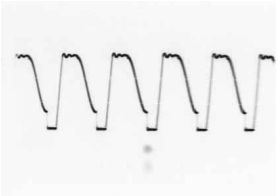 T1150-15,16,17,18 STOP 30Vp-p (5 μ sec.div)	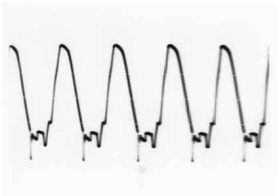 IC1150-1 STOP 10.0Vp-p (5 μ sec.div)
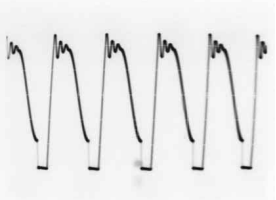 IC1150-9 STOP 580Vp-p (5 μ sec.div)	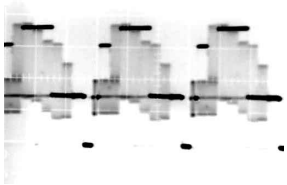 P7402-83 REC/PLAY 1.0Vp-p (20 μ sec.div)	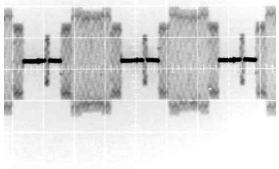 P7402-51 REC/PLAY 0.8Vp-p (20 μ sec.div)	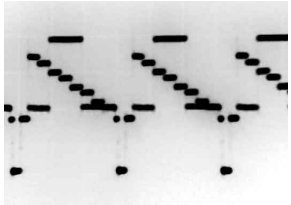 P7402-47 REC/PLAY 1.0Vp-p (20 μ sec.div)
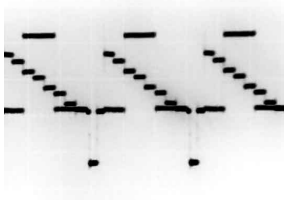 P7402-59 REC/PLAY 1.0Vp-p (20 μ sec.div)	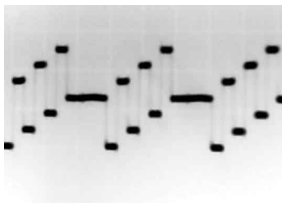 P7402-63 REC/PLAY 0.6Vp-p (20 μ sec.div)	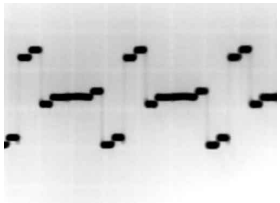 P7402-55 REC/PLAY 0.6Vp-p (20 μ sec.div)	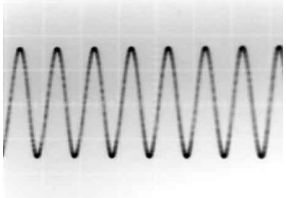 P7402-29,31 REC/PLAY 0.7Vp-p (1m sec.div)
JK3903-2 REC/PLAY 1.0Vp-p (20 μ sec.div)	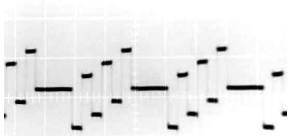 JK3903-3 REC/PLAY 1.0Vp-p (20 μ sec.div)	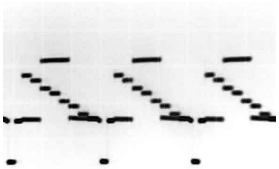 JK3903-4 REC/PLAY 2.0Vp-p (20 μ sec.div)	

16 Abbreviations

INITIAL/LOGO		ABBREVIATIONS
A	A0~UP	ADDRESS
	ACLK	AUDIO CLOCK
	AD0~UP	ADDRESS BUS
	ADATA	AUDIO PES PACKET DATA
	ALE	ADDRESS LATCH ENABLE
	AMUTE	AUDIO MUTE
	AREQ	AUDIO PES PACKET REQUEST
	ARF	AUDIO RF
	ASI	SERVO AMP INVERTED INPUT
	ASO	SERVO AMP OUTPUT
	ASYNC	AUDIO WORD DISTINCTION SYNC
B	BCK	BIT CLOCK (PCM)
	BCKIN	BIT CLOCK INPUT
	BDO	BLACK DROP OUT
	BLKCK	SUB CODE BLOCK CLOCK
	BOTTOM	CAP. FOR BOTTOM HOLD
	BYP	BYPATH
	BYTCK	BYTE CLOCK
C	CAV	CONSTANT ANGULAR VELOCITY
	CBDO	CAP. BLACK DROP OUT
	CD	COMPACT DISC
	CDSCK	CD SERIAL DATA CLOCK
	CDSRDATA	CD SERIAL DATA
	CDRF	CD RF (EFM) SIGNAL
	CDV	COMPACT DISC-VIDEO
	CHNDATA	CHANNEL DATA
	CKSL	SYSTEM CLOCK SELECT
	CLV	CONSTANT LINEAR VELOCITY
	COFTR	CAP. OFF TRACK
	CPA	CPU ADDRESS
	CPCS	CPU CHIP SELECT
	CPDT	CPU DATA
	CPUADR	CPU ADDRESS LATCH
	CPUADT	CPU ADDRESS DATA BUS
	CPUIRQ	CPU INTERRUPT REQUEST
	CPRD	CPU READ ENABLE
	CPWR	CPU WRITE ENABLE
	CS	CHIP SELECT
	CSYNCIN	COMPOSITE SYNC IN
	CSYNCOUT	COMPOSITE SYNC OUT
D	DACCK	D/A CONVERTER CLOCK
	DEEMP	DEEMPHASIS BIT ON/OFF
	DEMPH	DEEMPHASIS SWITCHING
	DIG0~UP	FL DIGIT OUTPUT
	DIN	DATA INPUT
	DMSRCK	DM SERIAL DATA READ CLOCK
	DMUTE	DIGITAL MUTE CONTROL
	DO	DROP OUT
	DOUT0~UP	DATA OUTPUT
	DRF	DATA SLICE RF (BIAS)
	DRPOUT	DROP OUT SIGNAL
	DREQ	DATA REQUEST
	DRESP	DATA RESPONSE
	DSC	DIGITAL SERVO CONTROLLER
	DSLF	DATA SLICE LOOP FILTER
	DVD	DIGITAL VIDEO DISC

INITIAL/LOGO		ABBREVIATIONS
E	EC	ERROR TORQUE CONTROL
	ECR	ERROR TORQUE CONTROL REFERENCE
	ENCSEL	ENCODER SELECT
	ETMCLK	EXTERNAL M CLOCK (81MHz/40.5MHz)
	ETSCLK	EXTERNAL S CLOCK (54MHz)
F	FBAL	FOCUS BALANCE
	FCLK	FRAME CLOCK
	FE	FOCUS ERROR
	FFI	FOCUS ERROR AMP INVERTED INPUT
	FEO	FOCUS ERROR AMP OUTPUT
	FG	FREQUENCY GENERATOR
	FSC	FREQUENCY SUB CARRIER
	FSCK	FS (384 OVER SAMPLING) CLOCK
G	GND	COMMON GROUNDING (EARTH)
H	HA0~UP	HOST ADDRESS
	HD0~UP	HOST DATA
	HINT	HOST INTERRUPT
	HRXW	HOST READ/WRITE
I	IECOUT	IEC958 FORMAT DATA OUTPUT
	IPFRAG	INTERPOLATION FLAG
	IREF	I (CURRENT) REFERENCE
	ISEL	INTERFACE MODE SELECT
L	LDON	LASER DIODE CONTROL
	LPC	LASER POWER CONTROL
	LRCK	L CH/R CH DISTINCTION CLOCK
M	MA0~UP	MEMORY ADDRESS
	MCK	MEMORY CLOCK
	MCKI	MEMORY CLOCK INPUT
	MCLK	MEMORY SERIAL COMMAND CLOCK
	MDATA	MEMORY SERIAL COMMAND DATA
	MDQ0~UP	MEMORY DATA INPUT/OUTPUT
	MDQM	MEMORY DATA I/O MASK
	MLD	MEMORY SERIAL COMMAND LOAD
	MPEG	MOVING PICTURE EXPERTS GROUP
O	ODC	OPTICAL DISC CONTROLLER
	OFTR	OFF TRACKING
	OSCI	OSCILLATOR INPUT
	OSCO	OSCILLATOR OUTPUT
	OSD	ON SCREEN DISPLAY
P	P1~UP	PORT
	PCD	CD TRACKING PHASE DIFFERENCE
	PCK	PLL CLOCK
	PDVD	DVD TRACKING PHASE DIFFERENCE
	PEAK	CAP. FOR PEAK HOLD
	PLLCLK	CHANNEL PLL CLOCK
	PLLOK	PLL LOCK
	PWMCTL	PWM OUTPUT CONTROL
	PWMDA	PULSE WAVE MOTOR DRIVE A
	PWMOA, B	PULSE WAVE MOTOR OUT A, B

INITIAL/LOGO		ABBREVIATIONS
R	RE	READ ENABLE
	RFENV	RF ENVELOPE
	RFO	RF PHASE DIFFERENCE OUTPUT
	RS	(CD-ROM) REGISTER SELECT
	RSEL	RF POLARITY SELECT
	RST	RESET
	RSV	RESERVE
S	SBI0, 1	SERIAL DATA INPUT
	SBO0	SERIAL DATA OUTPUT
	SBT0, 1	SERIAL CLOCK
	SCK	SERIAL DATA CLOCK
	SCKR	AUDIO SERIAL CLOCK RECEIVER
	SCL	SERIAL CLOCK
	SCLK	SERIAL CLOCK
	SDA	SERIAL DATA
	SEG0~UP	FL SEGMENT OUTPUT
	SELCLK	SELECT CLOCK
	SEN	SERIAL PORT ENABLE
	SIN1, 2	SERIAL DATA IN
	SOUT1, 2	SERIAL DATA OUT
	SPDI	SERIAL PORT DATA INPUT
	SPDO	SERIAL PORT DATA OUTPUT
	SPEN	SERIAL PORT R/W ENABLE
	SPRCLK	SERIAL PORT READ CLOCK
	SPWCLK	SERIAL PORT WRITE CLOCK
	SQCK	SUB CODE Q CLOCK
	SQCX	SUB CODE Q DATA READ CLOCK
	SRDATA	SERIAL DATA
	SRMADR	SRAM ADDRESS BUS
	SRMDT0~7	SRAM DATA BUS 0~7
	SS	START/STOP
	STAT	STATUS
	STCLK	STREAM DATA CLOCK
	STD0~UP	STREAM DATA
	STENABLE	STREAM DATA INPUT ENABLE
	STSEL	STREAM DATA POLARITY SELECT
	STVALID	STREAM DATA VALIDITY
	SUBC	SUB CODE SERIAL
	SBCK	SUB CODE CLOCK
	SUBQ	SUB CODE Q DATA
	SYSCLK	SYSTEM CLOCK
T	TE	TRACKING ERROR
	TIBAL	BALANCE CONTROL
	TID	BALANCE OUTPUT 1
	TIN	BALANCE INPUT
	TIP	BALANCE INPUT
	TIS	BALANCE OUTPUT 2
	TPSN	OP AMP INPUT
	TPSO	OP AMP OUTPUT
	TPSP	OP AMP INVERTED INPUT
	TRCRS	TRACK CROSS SIGNAL
	TRON	TRACKING ON
	TRSON	TRAVERSE SERVO ON

INITIAL/LOGO		ABBREVIATIONS
V	VBLANK	V BLANKING
	VCC	COLLECTOR POWER SUPPLY VOLTAGE
	VCDCONT	VIDEO CD CONTROL (TRACKING BALANCE)
	VDD	DRAIN POWER SUPPLY VOLTAGE
	VFB	VIDEO FEED BACK
	VREF	VOLTAGE REFERENCE
	VSS	SOURCE POWER SUPPLY VOLTAGE
W	WAIT	BUS CYCLE WAIT
	WDCK	WORD CLOCK
	WEH	WRITE ENABLE HIGH
	WSR	WORD SELECT RECEIVER
X	X	X´ TAL
	XALE	X ADDRESS LATCH ENABLE
	XAREQ	X AUDIO DATA REQUEST
	XCDROM	X CD ROM CHIP SELECT
	XCS	X CHIP SELECT
	XCSYNC	X COMPOSITE SYNC
	XDS	X DATA STROBE
	XHSYNCO	X HORIZONTAL SYNC OUTPUT
	XHINT	XH INTERRUPT REQUEST
	XI	X´ TAL OSCILLATOR INPUT
	XINT	X INTERRUPT
	XMW	X MEMORY WRITE ENABLE
	XO	X´ TAL OSCILLATOR OUTPUT
	XRE	X READ ENABLE
	XSRMCE	X SRAM CHIP ENABLE
	XSRMOE	X SRAM OUTPUT ENABLE
	XSRMWE	X SRAM WRITE ENABLE
	XVCS	X V-DEC CHIP SELECT
	XVDS	X V-DEC CONTROL BUS STROBE
	XVSYNCO	X VERTICAL SYNC OUTPUT

17 Block Diagram

17.1. Power Supply Block Diagram

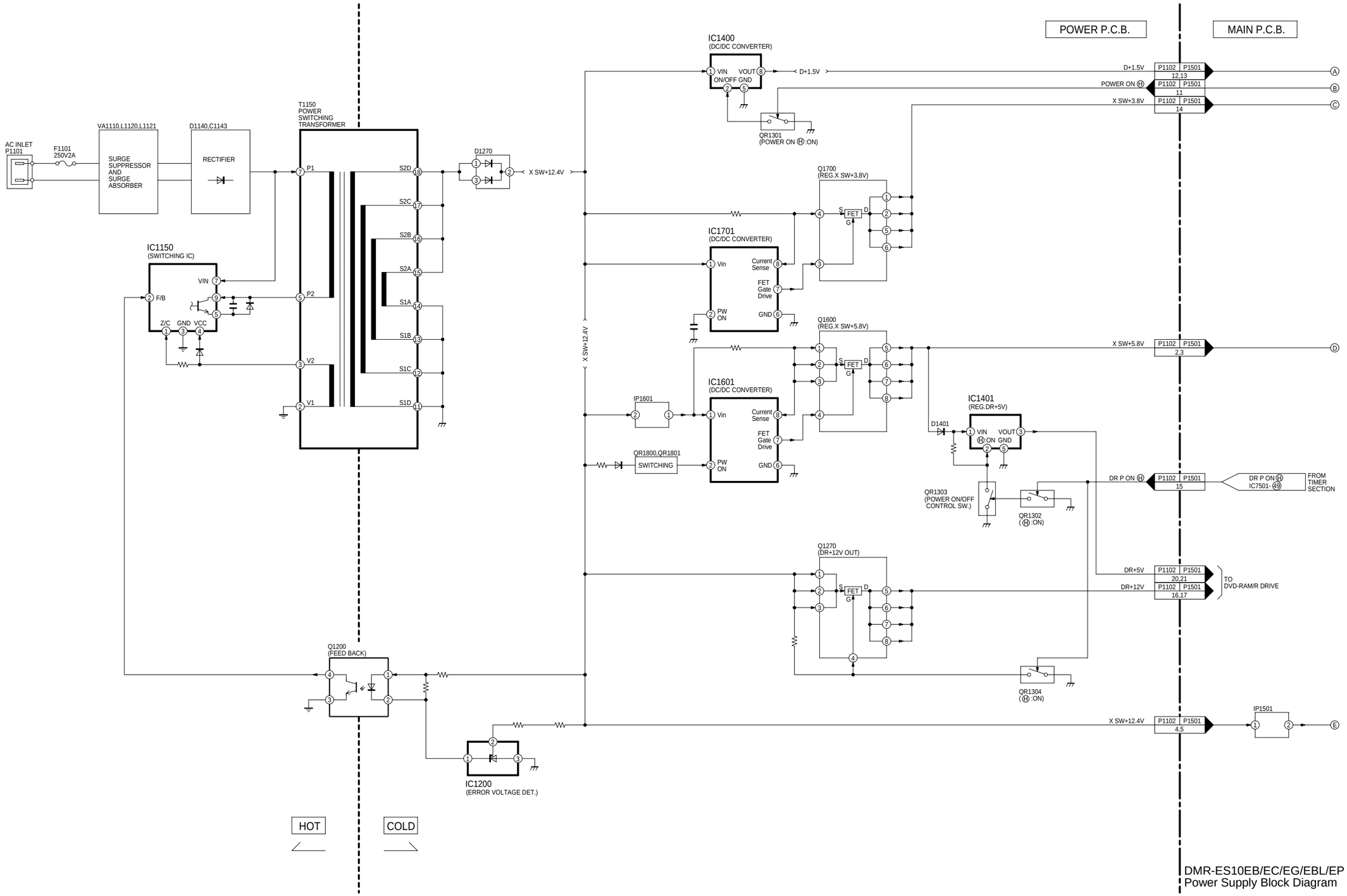

DMR-ES10EB/EC/EG/EBL/EP
Power Supply Block Diagram

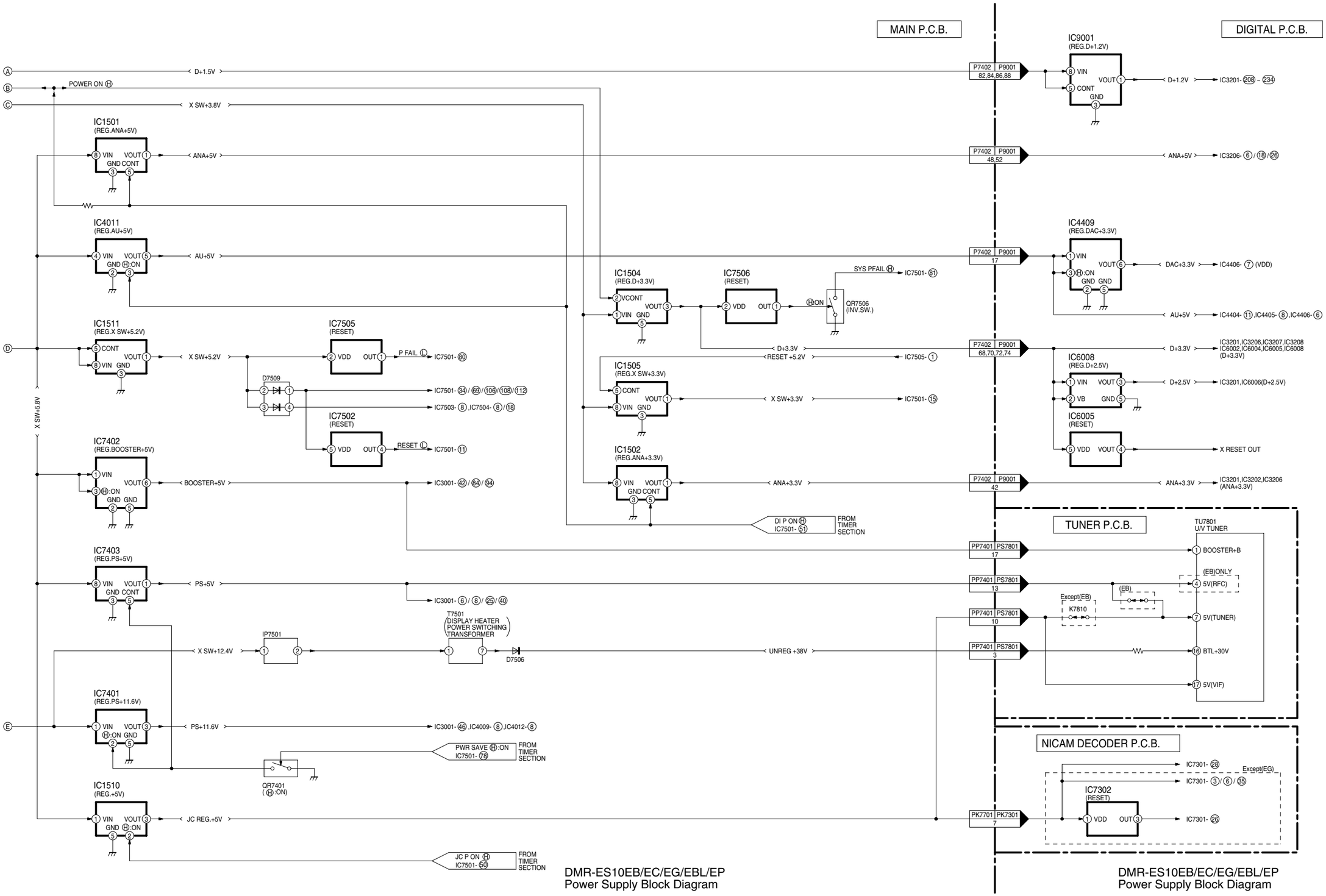

DMR-ES10EB/EC/EG/EBL/EP
Power Supply Block Diagram

DMR-ES10EB/EC/EG/EBL/EP
Power Supply Block Diagram

17.2. Analog Video Block Diagram

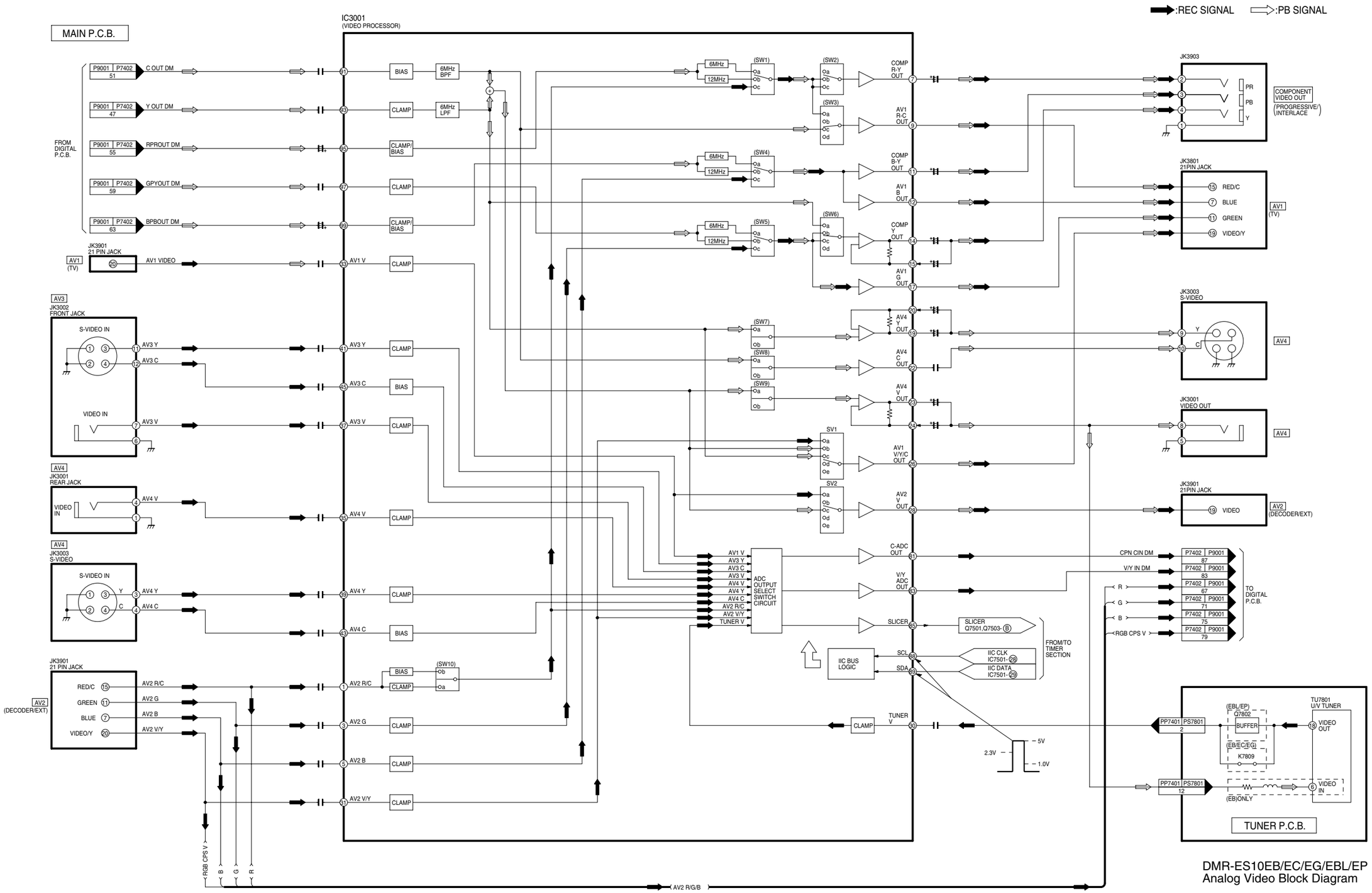

DMR-ES10EB/EC/EG/EBL/EP
Analog Video Block Diagram

17.3. Analog Audio Block Diagram

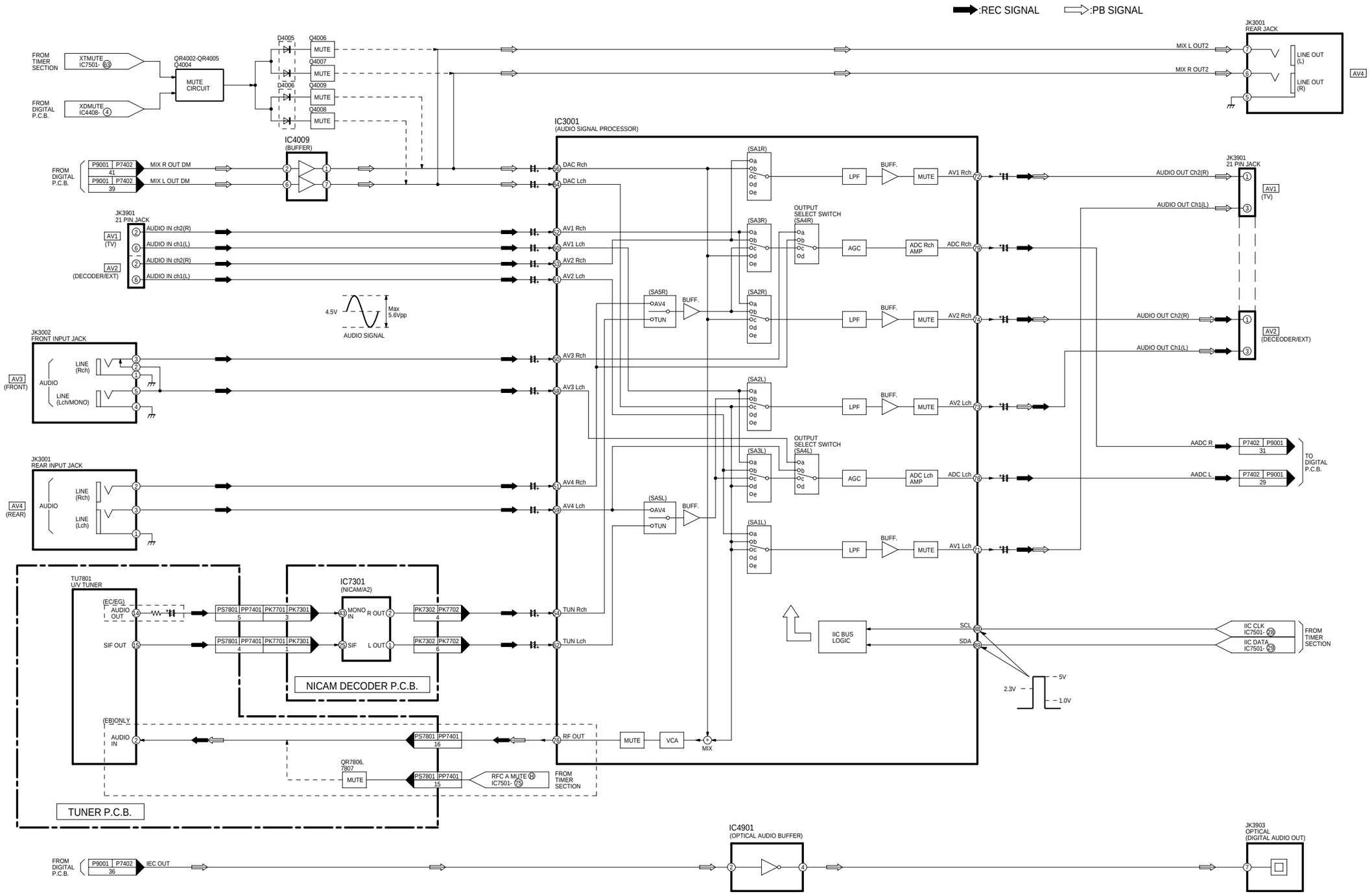

DMR-ES10EB/EC/EG/EBL/EP
Analog Audio Block Diagram

17.4. Timer Block Diagram

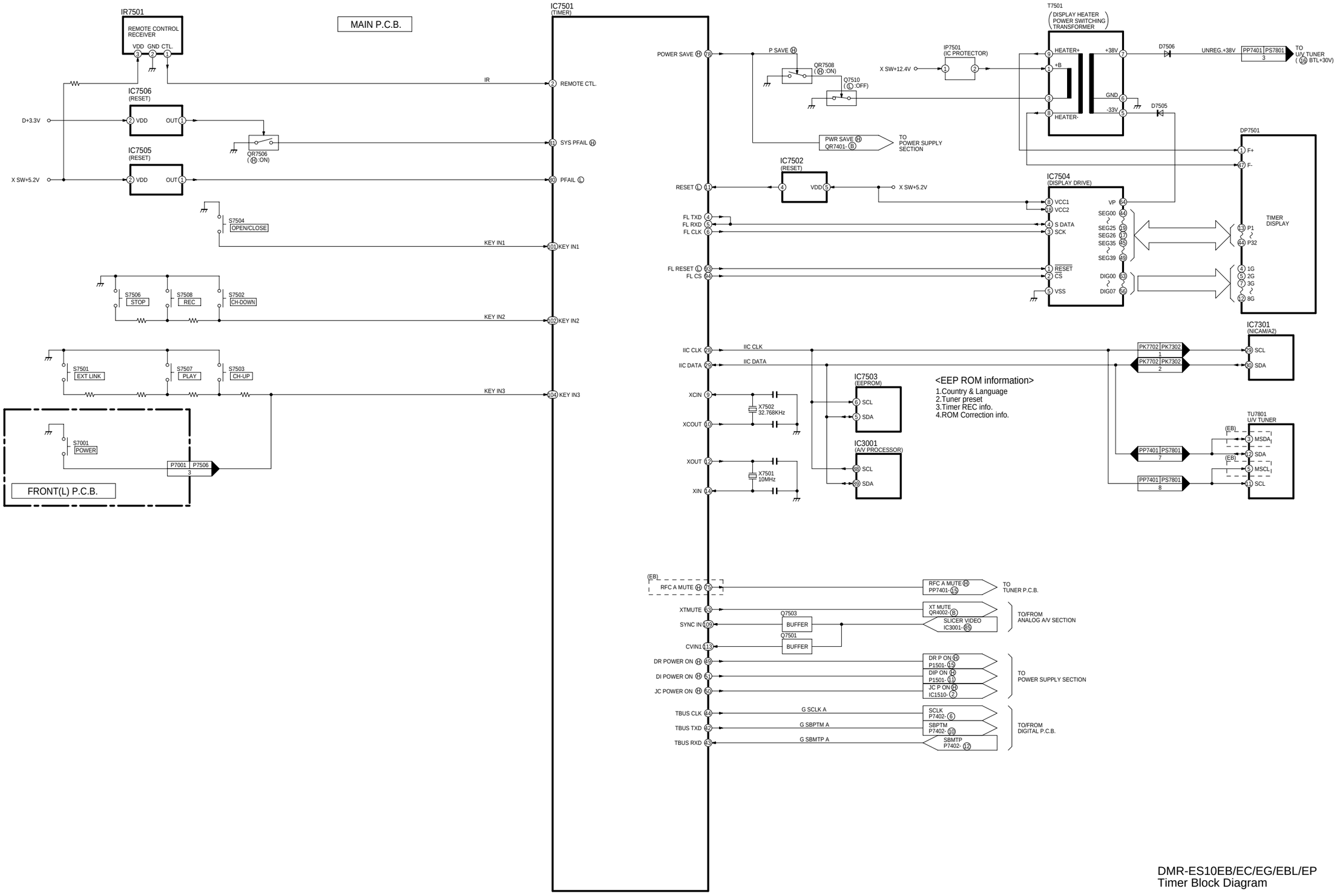

DMR-ES10EB/EC/EG/EBL/EP
Timer Block Diagram

18 Schematic Diagram

18.1. Interconnection Schematic Diagram

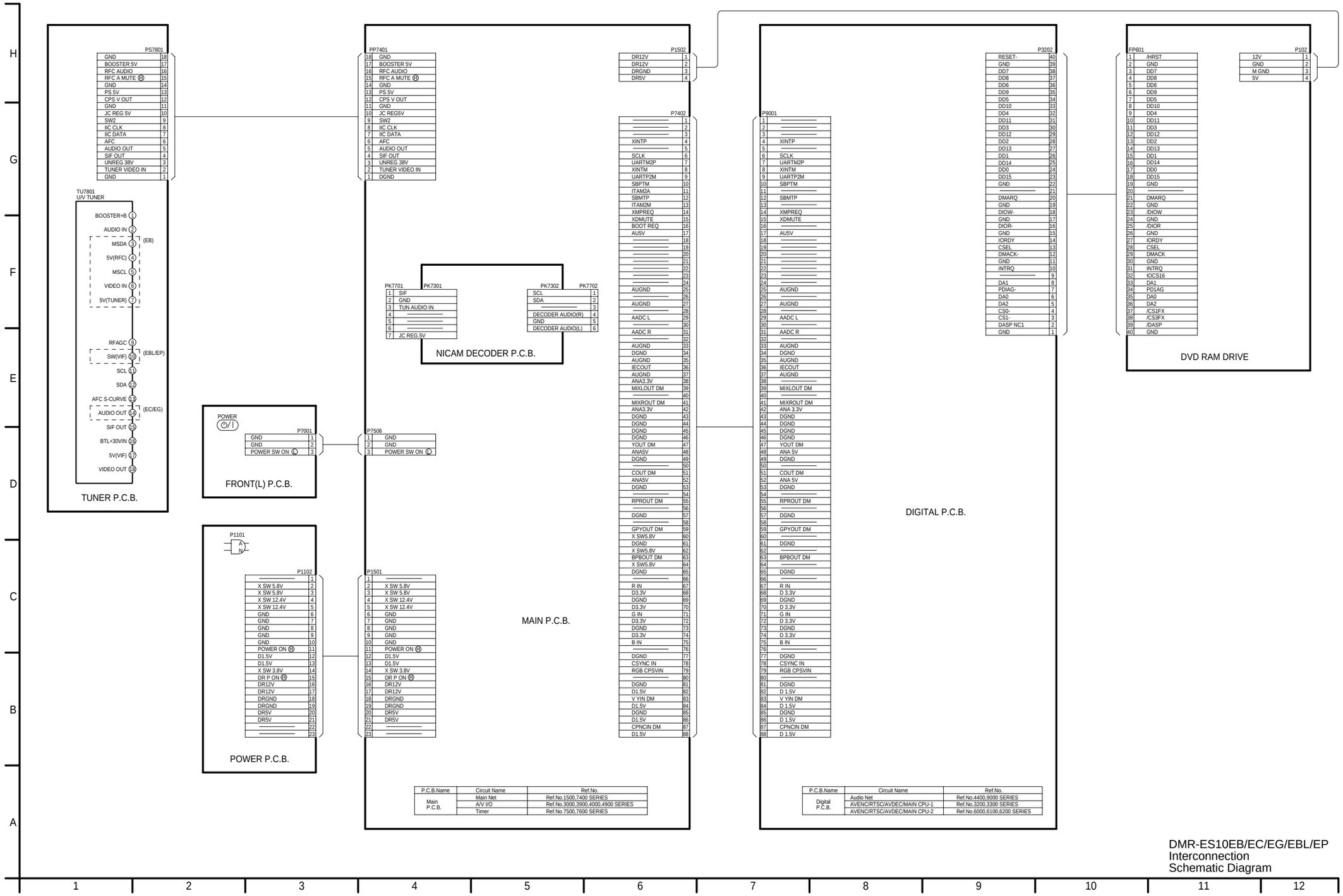

P.C.B.Name	Circuit Name	Ref.No.
Main P.C.B.	Main Net	Ref.No.1500,7400 SERIES
	A/V I/O	Ref.No.3000,3900,4000,4900 SERIES
	Timer	Ref.No.7500,7600 SERIES

P.C.B.Name	Circuit Name	Ref.No.
Digital P.C.B.	Audio Net	Ref.No.4400,9000 SERIES
	AVENC/RTSC/AVDEC/MAIN CPU-1	Ref.No.3200,3300 SERIES
	AVENC/RTSC/AVDEC/MAIN CPU-2	Ref.No.6000,6100,6200 SERIES

18.2. Power Supply Schematic Diagram

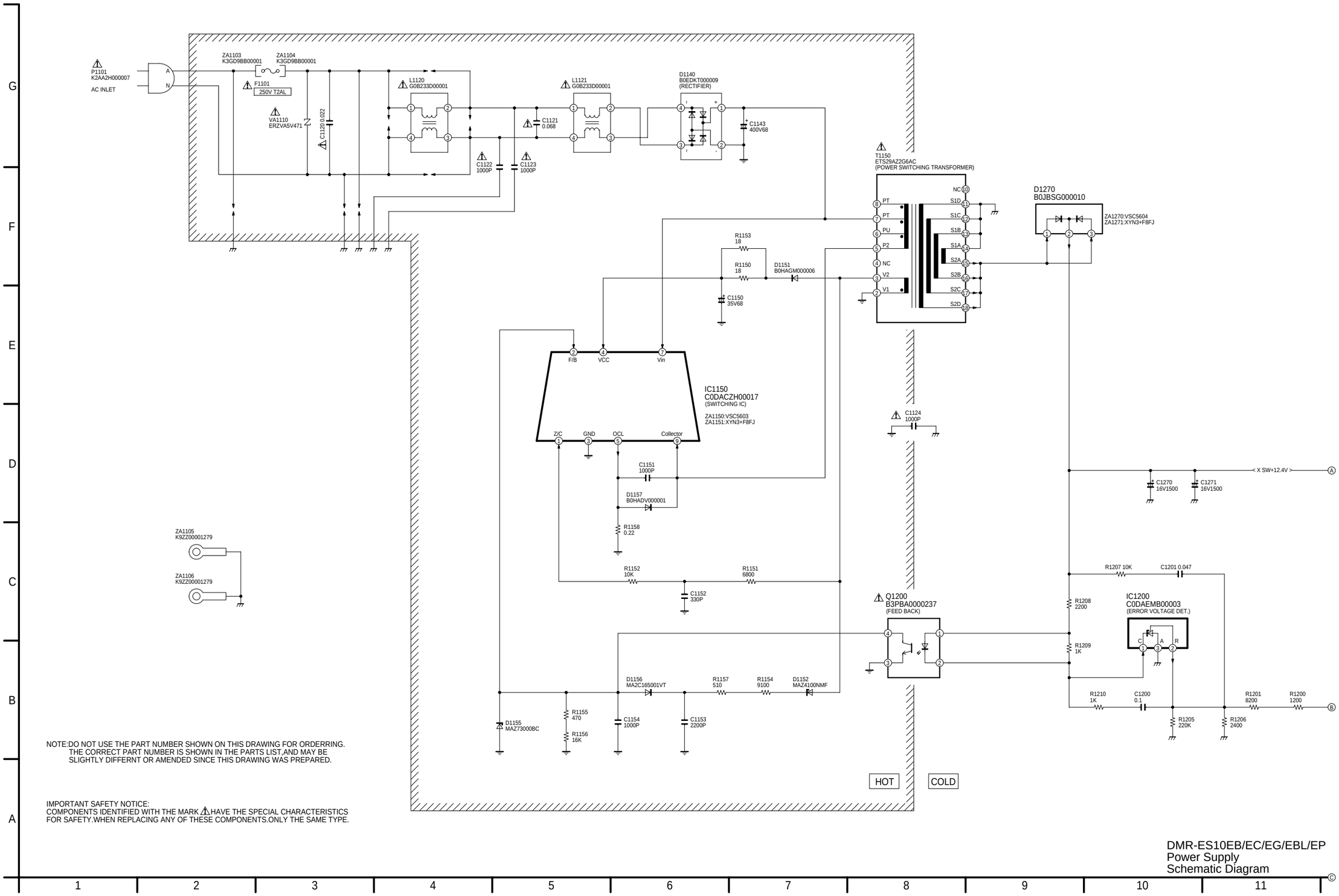

NOTE:DO NOT USE THE PART NUMBER SHOWN ON THIS DRAWING FOR ORDERRING.
THE CORRECT PART NUMBER IS SHOWN IN THE PARTS LIST,AND MAY BE
SLIGHTLY DIFFERNT OR AMENDED SINCE THIS DRAWING WAS PREPARED.

IMPORTANT SAFETY NOTICE:
COMPONENTS IDENTIFIED WITH THE MARK ⚠ HAVE THE SPECIAL CHARACTERISTICS
FOR SAFETY.WHEN REPLACING ANY OF THESE COMPONENTS.ONLY THE SAME TYPE.

DMR-ES10EB/EC/EG/EBL/EP
Power Supply
Schematic Diagram

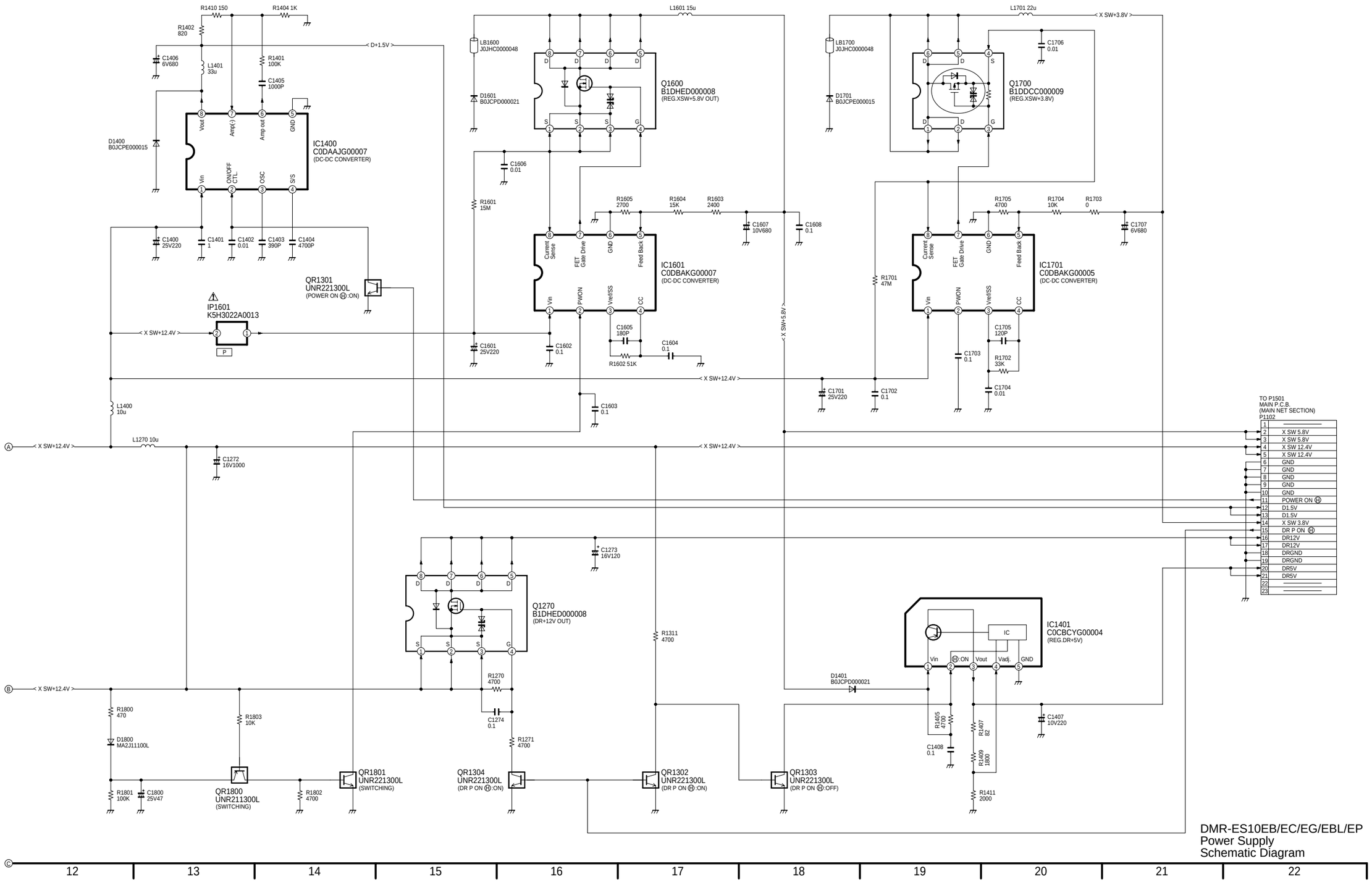
R1410 150
R1404 1K
R1402 820
< D+1.5V >
C1406 6V680
L1401 33u
R1401 100K
C1405 1000P
D1400 B0JCPE000015
IC1400
C0DAAJG00007
(DC-DC CONVERTER)
Vout
Amp(-)
Amp out
GND
Vin
ON/OFF CTL.
OSC
S/S
C1400 25V220
C1401 1
C1402 0.01
C1403 390P
C1404 4700P
QR1301
UNR221300L
(POWER ON Ⓗ:ON)
IP1601
K5H3022A0013
< X SW+12.4V >
L1400 10u
L1270 10u
C1272 16V1000
L1601 15u
LB1600 J0JHC0000048
D1601 B0JCPD000021
Q1600
B1DHED000008
(REG.XSW+5.8V OUT)
C1606 0.01
R1601 15M
R1605 2700
R1604 15K
R1603 2400
C1607 10V680
C1608 0.1
IC1601
C0DBAKG00007
(DC-DC CONVERTER)
Current Sense
FET Gate Drive
Feed Back
Vin
PWON
Vref/SS
CC
C1605 180P
C1604 0.1
R1602 51K
C1601 25V220
C1602 0.1
C1603 0.1
< X SW+5.8V >
L1701 22u
< X SW+3.8V >
LB1700 J0JHC0000048
D1701 B0JCPE000015
C1706 0.01
Q1700
B1DDCC000009
(REG.XSW+3.8V)
R1705 4700
R1704 10K
R1703 0
C1707 6V680
IC1701
C0DBAKG00005
(DC-DC CONVERTER)
R1701 47M
C1705 120P
R1702 33K
C1703 0.1
C1704 0.01
C1701 25V220
C1702 0.1
TO P1501
MAIN P.C.B.
(MAIN NET SECTION)
P1102
1
2 X SW 5.8V
3 X SW 5.8V
4 X SW 12.4V
5 X SW 12.4V
6 GND
7 GND
8 GND
9 GND
10 GND
11 POWER ON Ⓗ
12 D1.5V
13 D1.5V
14 X SW 3.8V
15 DR P ON Ⓗ
16 DR12V
17 DR12V
18 DRGND
19 DRGND
20 DR5V
21 DR5V
22
23
C1273 16V120
Q1270
B1DHED000008
(DR+12V OUT)
R1311 4700
R1270 4700
C1274 0.1
R1271 4700
IC1401
C0CBCYG00004
(REG.DR+5V)
IC
Vin
Ⓗ:ON
Vout
Vadj.
GND
D1401 B0JCPD000021
R1405 4700
C1408 0.1
R1407 82
R1409 1800
R1411 2000
C1407 10V220
R1800 470
D1800 MA2J11100L
R1803 10K
R1801 100K
C1800 25V47
QR1800
UNR211300L
(SWITCHING)
R1802 4700
QR1801
UNR221300L
(SWITCHING)
QR1304
UNR221300L
(DR P ON Ⓗ:ON)
QR1302
UNR221300L
(DR P ON Ⓗ:ON)
QR1303
UNR221300L
(DR P ON Ⓗ:OFF)
DMR-ES10EB/EC/EG/EBL/EP
Power Supply
Schematic Diagram
12
13
14
15
16
17
18
19
20
21
22

18.3. Main Net Section (Main P.C.B. (1/3)) Schematic Diagram (M)

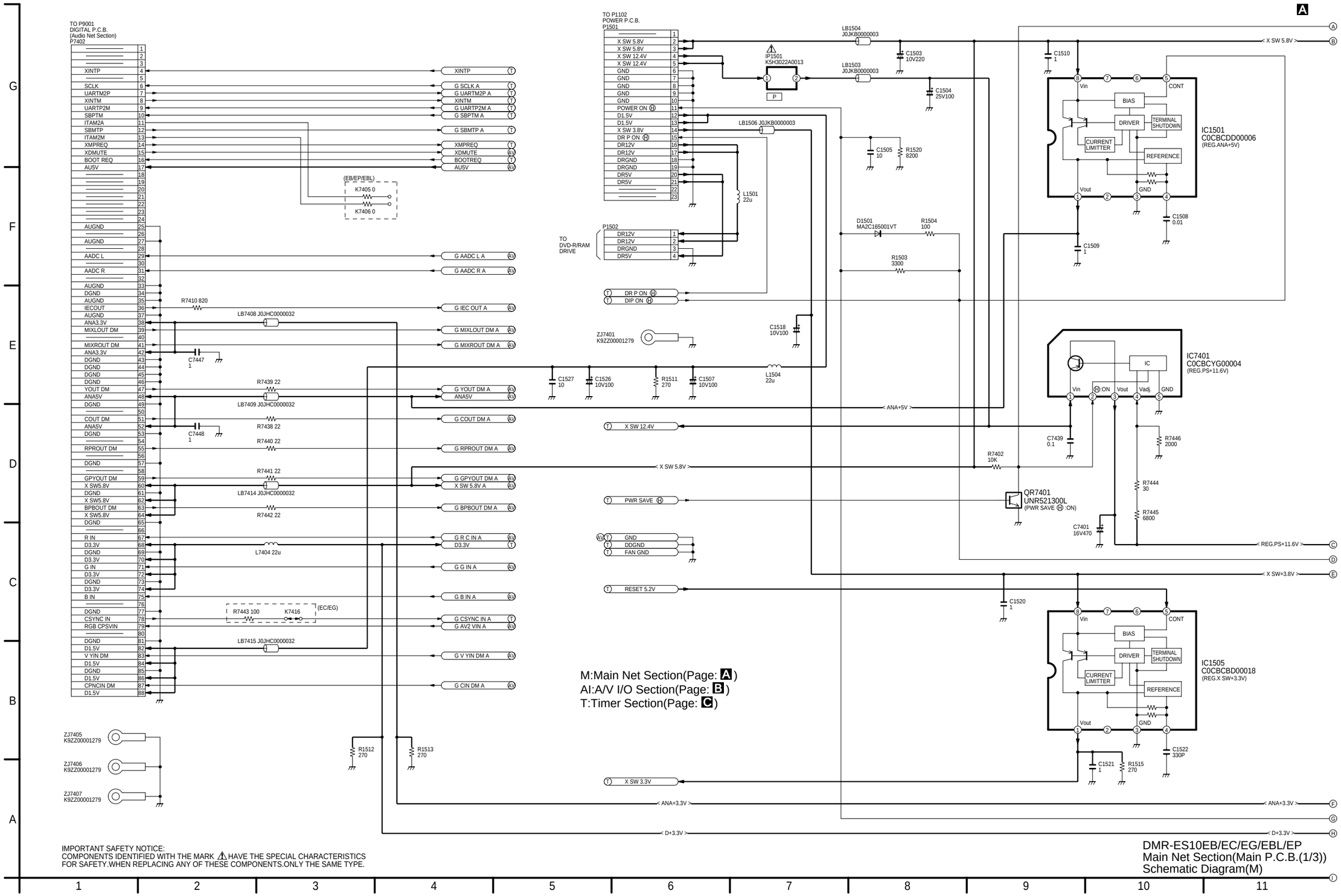

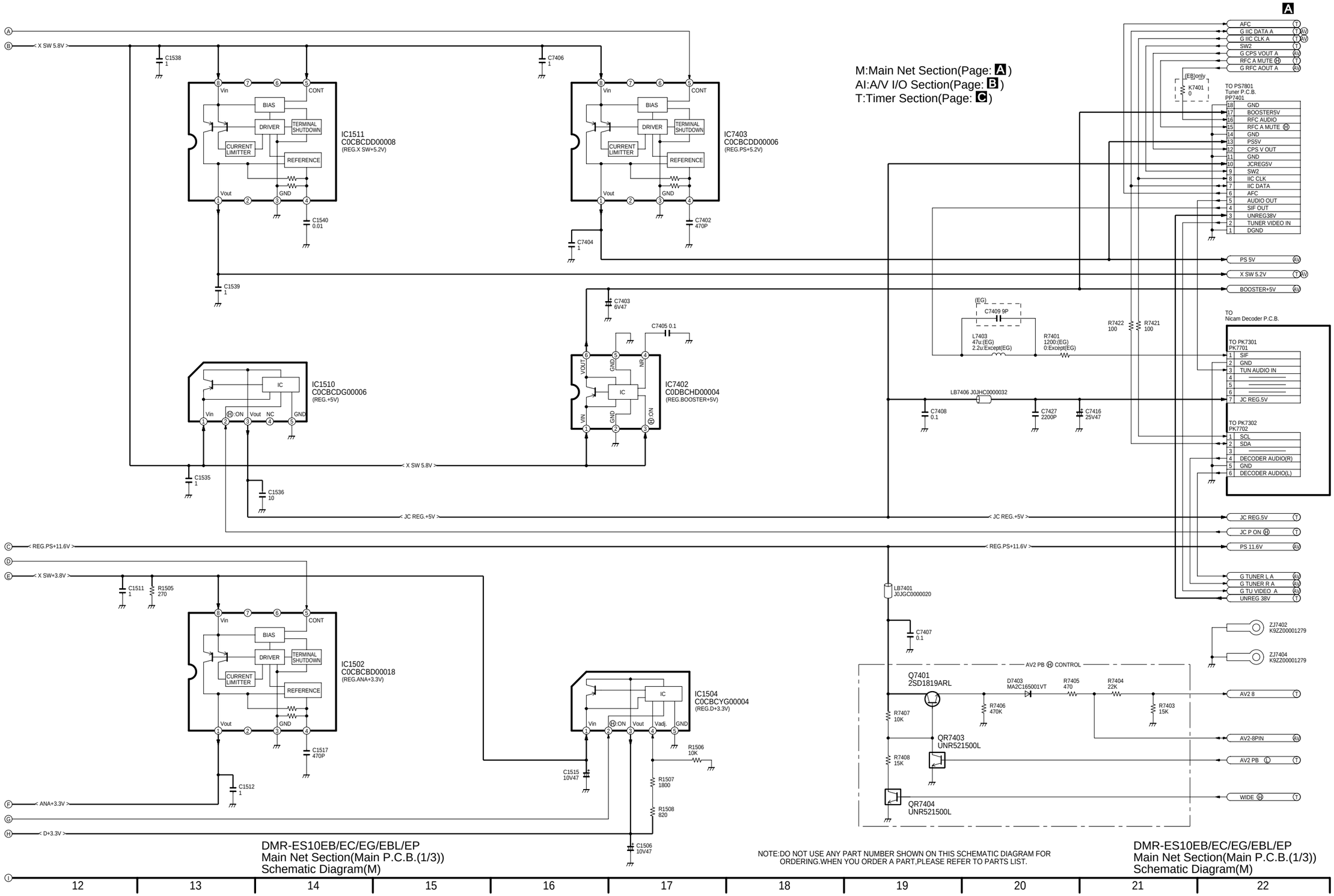

DMR-ES10EB/EC/EG/EBL/EP
Main Net Section(Main P.C.B.(1/3))
Schematic Diagram(M)

NOTE:DO NOT USE ANY PART NUMBER SHOWN ON THIS SCHEMATIC DIAGRAM FOR ORDERING.WHEN YOU ORDER A PART,PLEASE REFER TO PARTS LIST.

DMR-ES10EB/EC/EG/EBL/EP
Main Net Section(Main P.C.B.(1/3))
Schematic Diagram(M)

18.4. A/V I/O Section (Main P.C.B. (2/3)) Schematic Diagram (AI)

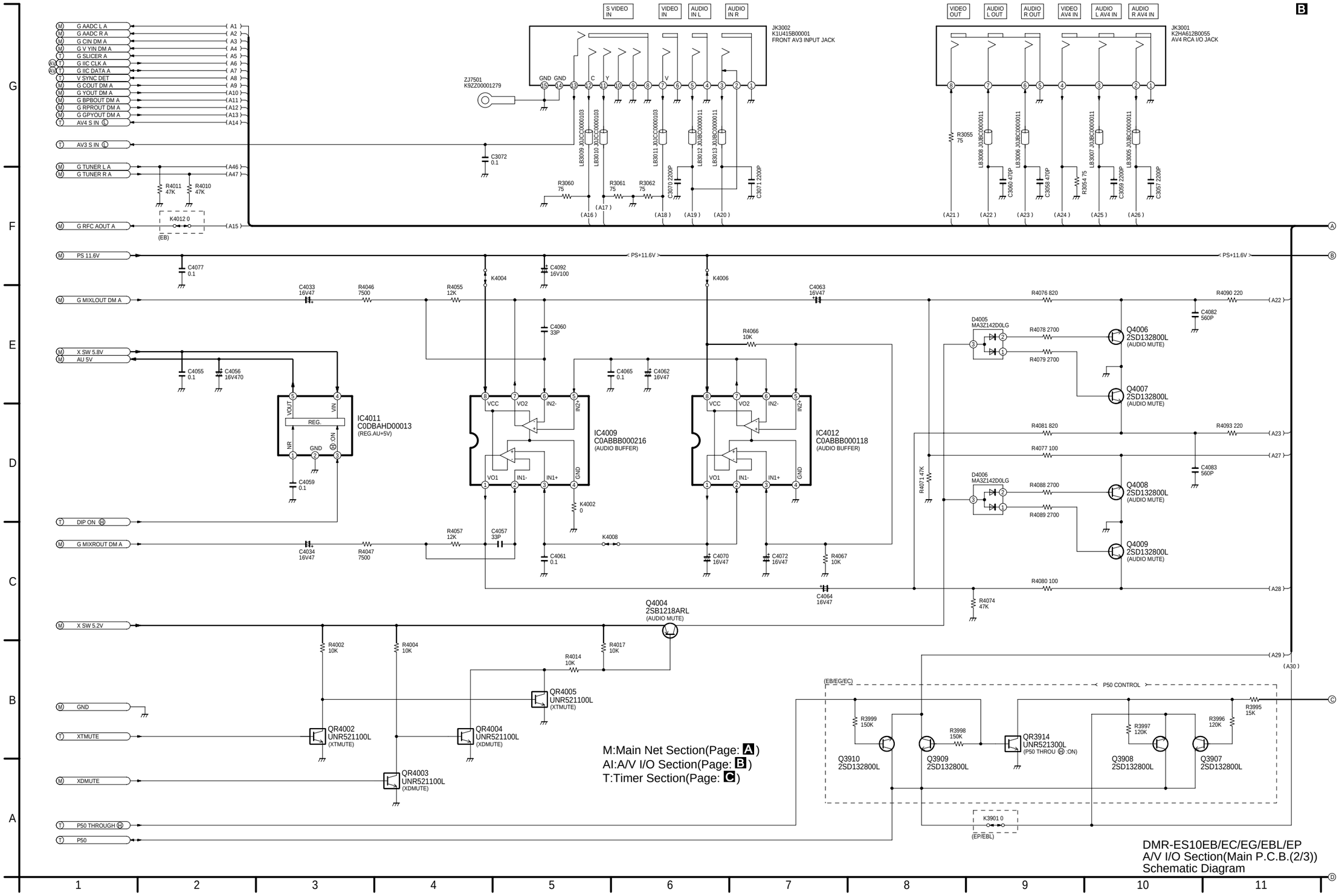

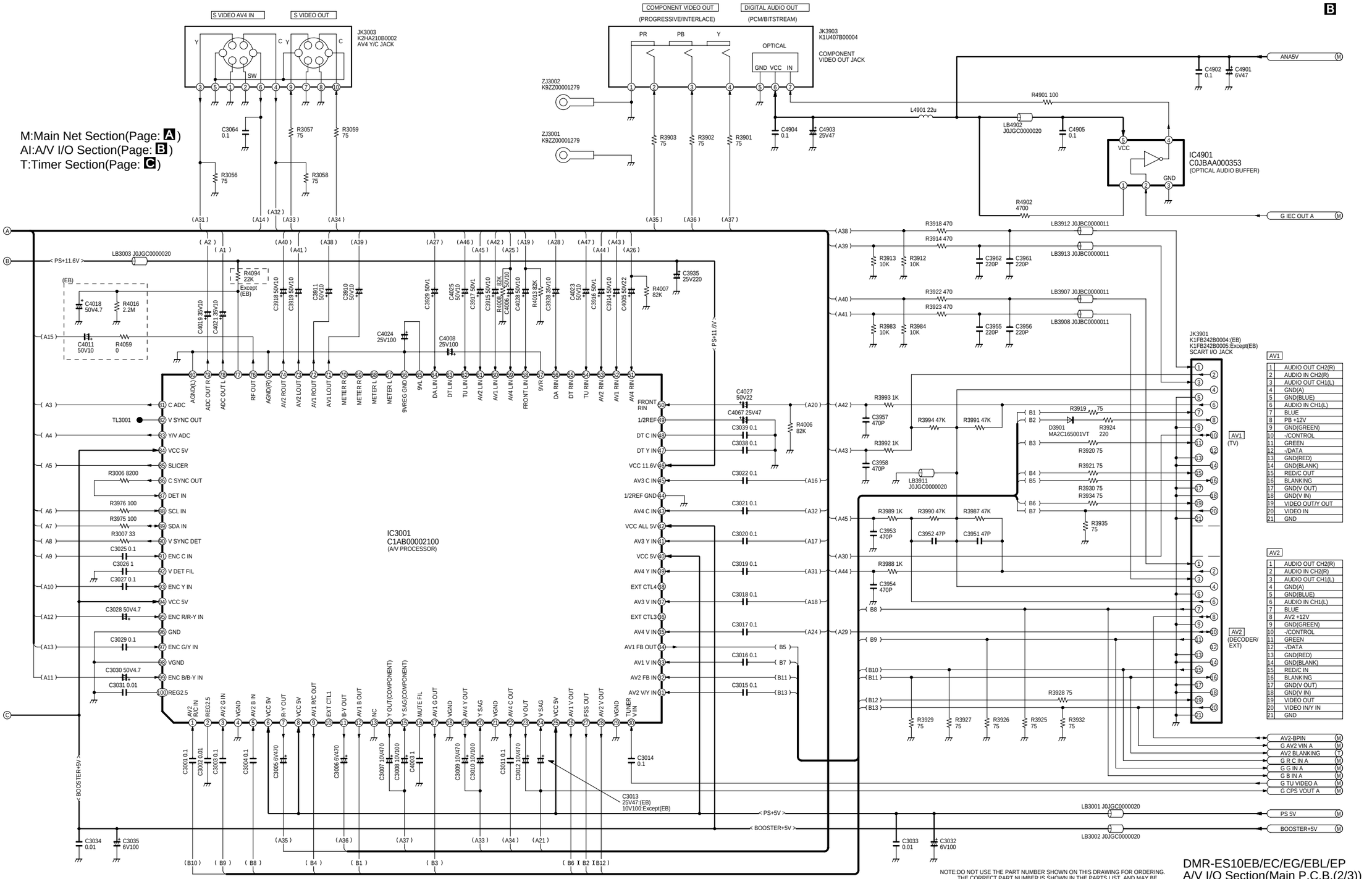

DMR-ES10EB/EC/EG/EBL/EP A/V I/O Section(Main P.C.B.(2/3)) Schematic Diagram

NOTE:DO NOT USE THE PART NUMBER SHOWN ON THIS DRAWING FOR ORDERING. THE CORRECT PART NUMBER IS SHOWN IN THE PARTS LIST, AND MAY BE SLIGHTLY DIFFERNT OR AMENDED SINCE THIS DRAWING WAS PREPARED.

DMR-ES10EB/EC/EG/EBL/EP
A/V I/O Section(Main P.C.B.(2/3))
Schematic Diagram

18.5. Timer Section (Main P.C.B. (3/3)) Schematic Diagram (T)

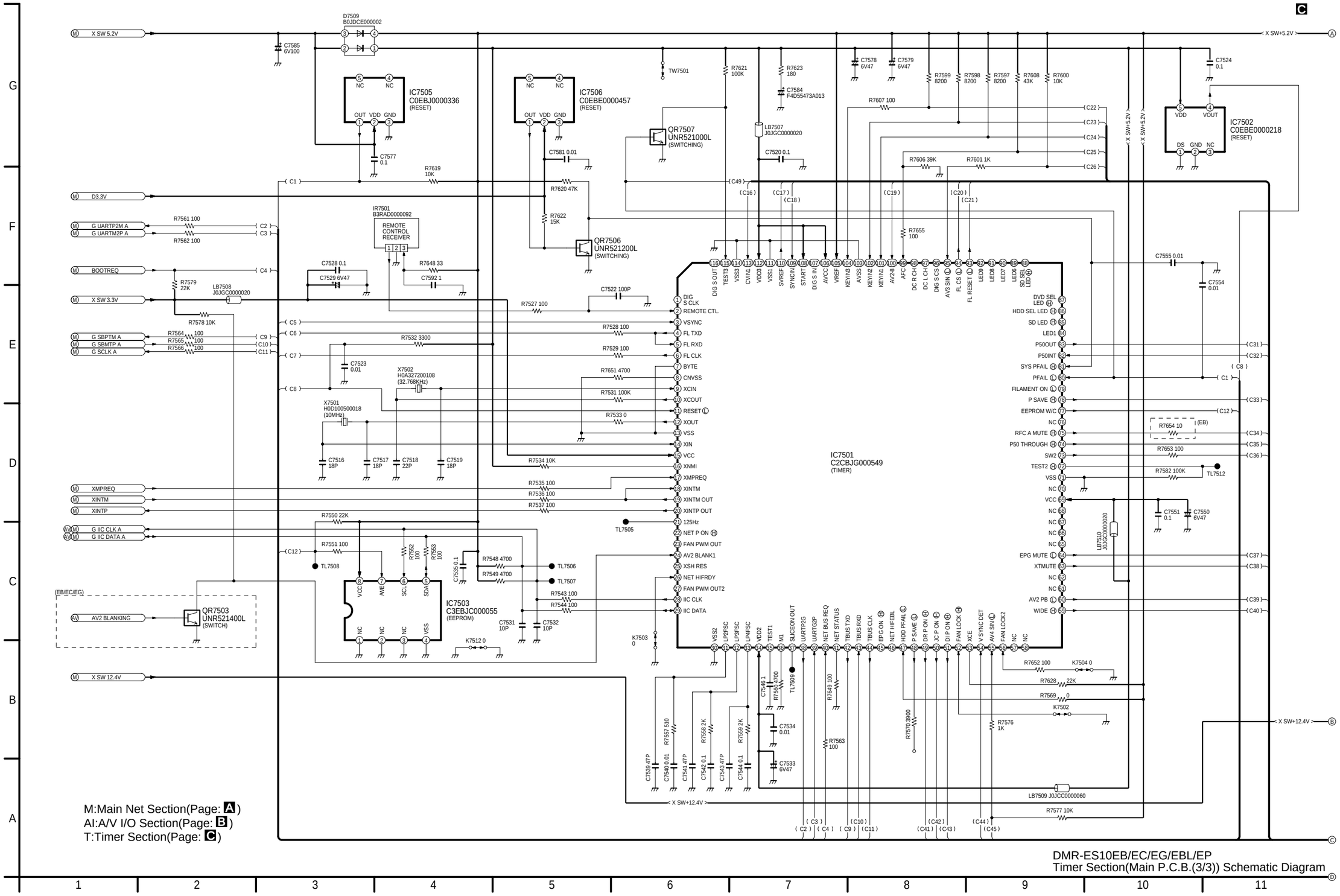

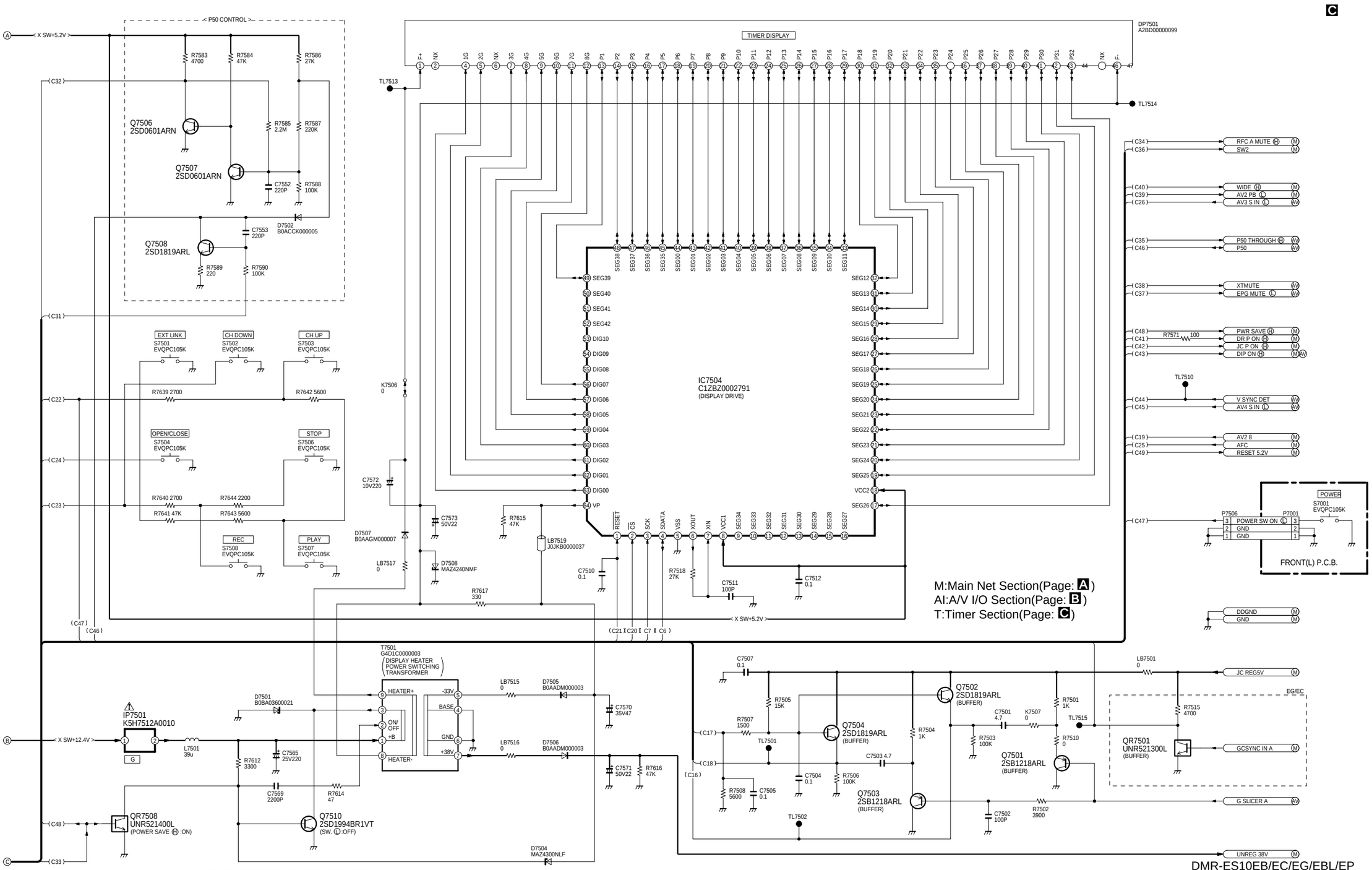

DMR-ES10EB/EC/EG/EBL/EP
Timer Section(Main P.C.B.(3/3)) Schematic Diagram

IMPORTANT SAFETY NOTICE:
COMPONENTS IDENTIFIED WITH THE MARK ⚠ HAVE THE SPECIAL CHARACTERISTICS FOR SAFETY.WHEN REPLACING ANY OF THESE COMPONENTS.ONLY THE SAME TYPE.

NOTE:DO NOT USE ANY PART NUMBER SHOWN ON THIS SCHEMATIC DIAGRAM FOR ORDERING.WHEN YOU ORDER A PART,PLEASE REFER TO PARTS LIST.

DMR-ES10EB/EC/EG/EBL/EP
Timer Section(Main P.C.B.(3/3))
Schematic Diagram

18.6. Tuner Pack Schematic Diagram

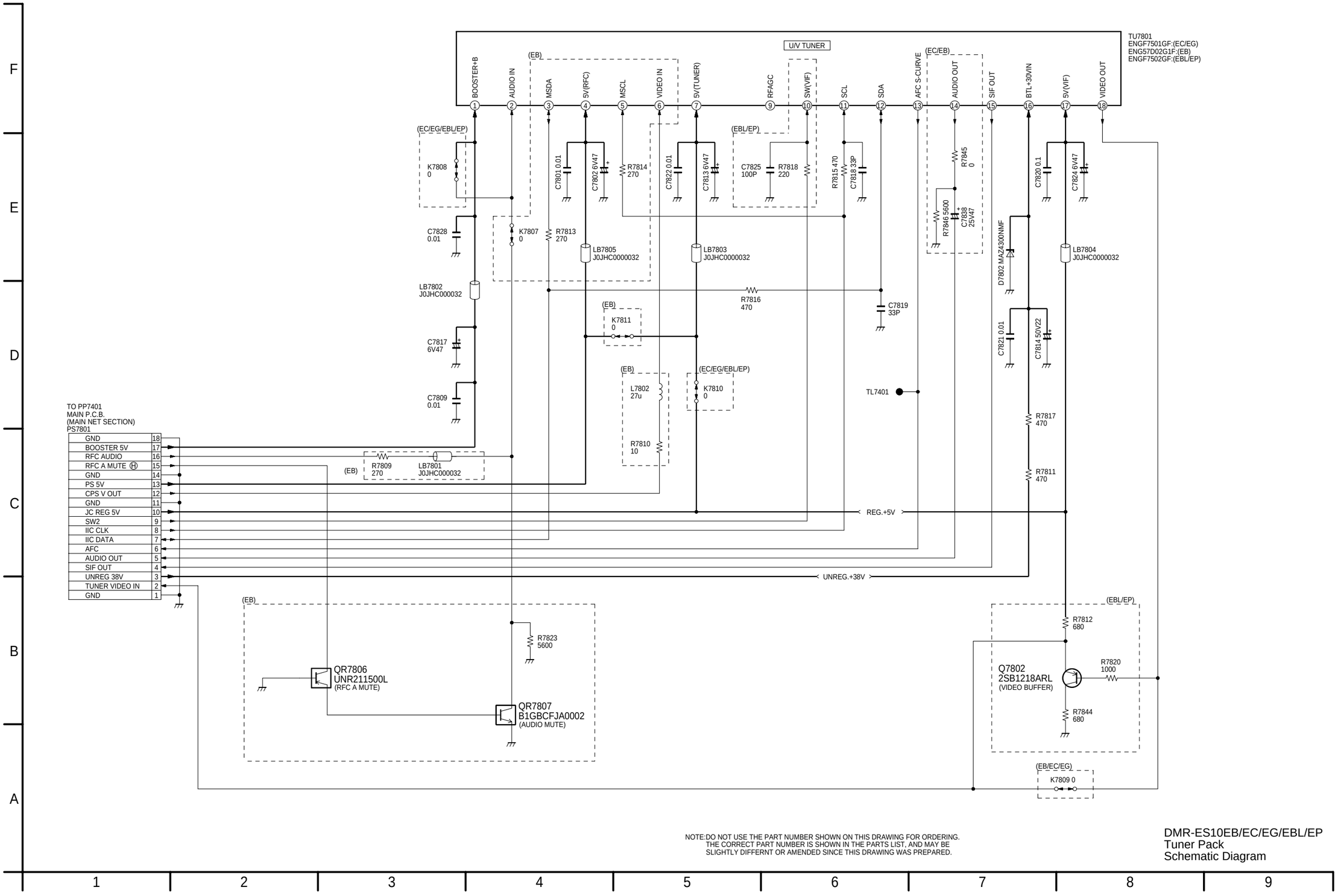

18.7. Nicam Decoder Schematic Diagram

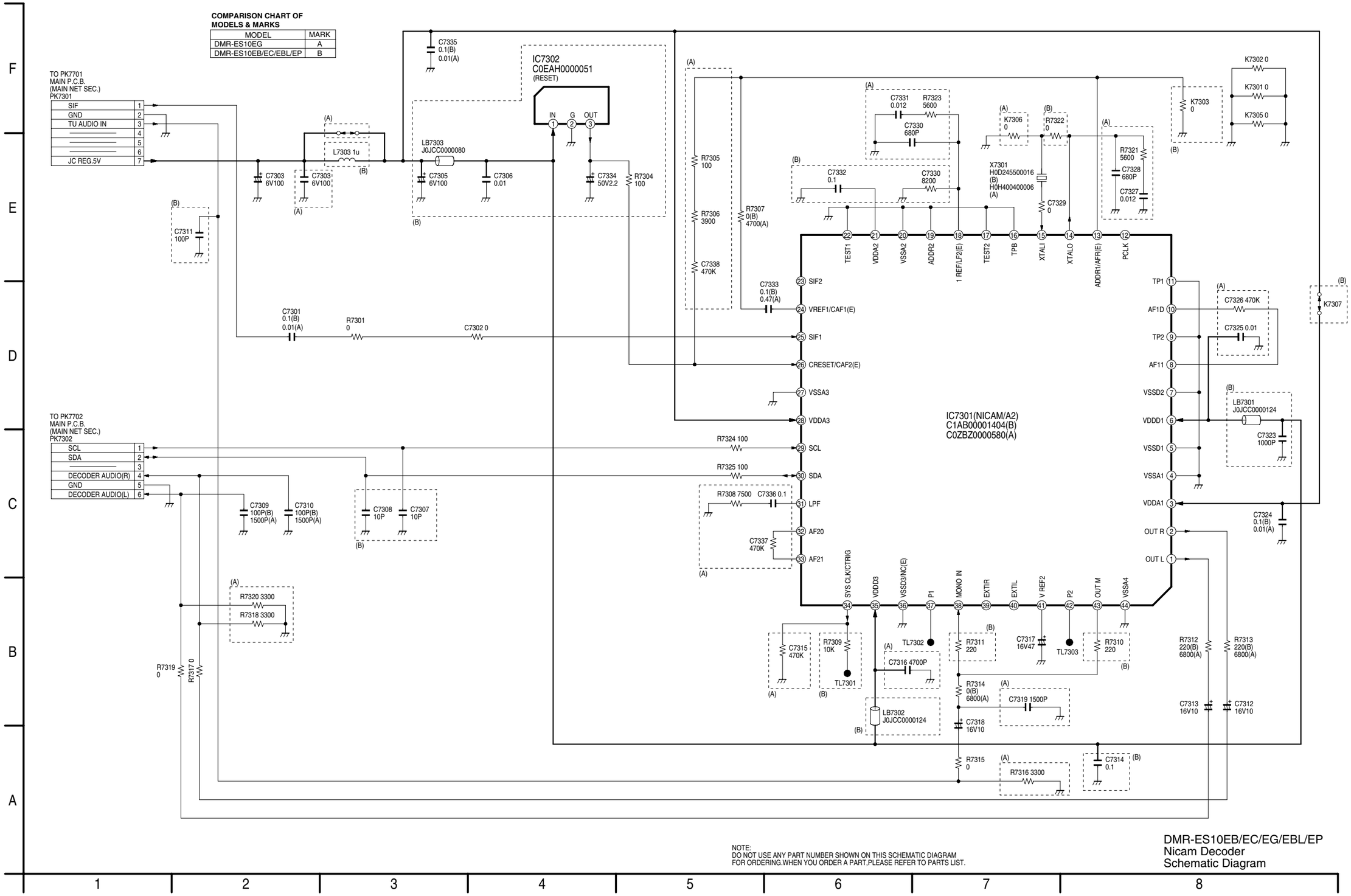

19 Print Circuit Board

19.1. Power P.C.B.

Power P.C.B.

Power P.C.B.													
Integrated Circuit		P1102	B-1	L1270	C-4	C1152	D-6	C1603	B-5	R1156	D-7	R1411	D-4
IC1150	C-7	**Diode**		L1400	C-4	C1153	D-7	C1604	B-5	R1157	D-7	R1601	B-4
IC1200	D-5	D1140	B-7	L1401	B-2	C1154	D-7	C1605	B-5	R1158	C-6	R1602	B-5
IC1400	B-3	D1151	C-6	L1601	B-4	C1200	D-5	C1606	B-4	R1200	D-5	R1603	B-4
IC1401	D-4	D1152	D-7	L1701	C-2	C1201	D-5	C1607	B-4	R1201	D-5	R1604	B-4
IC1601	B-5	D1155	D-6	LB1122	C-6	C1270	C-5	C1608	B-4	R1205	D-5	R1605	B-4
IC1701	C-3	D1156	D-7	LB1123	B-7	C1271	C-4	C1701	C-3	R1206	D-5	R1701	C-3
Transistor		D1157	C-6	LB1124	D-5	C1272	C-3	C1702	C-3	R1207	D-5	R1702	C-3
Q1200	D-6	D1270	C-5	LB1600	B-4	C1273	D-2	C1703	C-3	R1208	D-5	R1703	C-2
Q1270	D-2	D1400	B-2	LB1700	C-2	C1274	D-3	C1704	C-3	R1209	D-5	R1704	C-3
Q1600	B-4	D1401	D-3	**Fuse**		C1400	B-3	C1705	C-3	R1210	D-5	R1705	C-3
Q1700	C-2	D1601	B-4	F1101	D-9	C1401	B-3	C1706	C-3	R1270	D-3	R1800	B-5
Transistor-resistor		D1701	C-2	**Capacitor**		C1402	B-3	C1707	C-2	R1271	D-3	R1801	B-5
QR1301	B-3	D1800	B-5	C1120	D-8	C1403	B-3	C1800	B-5	R1311	D-5	R1802	B-5
QR1302	E-4	**IC Protector**		C1121	B-8	C1404	B-3	**Resistor**		R1401	B-2	R1803	B-5
QR1303	E-4	IP1601	B-4	C1122	B-9	C1405	B-2	R1150	C-7	R1402	B-2	**Varistor**	
QR1304	D-3	**Transformer**		C1123	C-9	C1406	B-2	R1151	D-6	R1404	B-2	VA1110	C-8
QR1800	B-5	T1150	C-6	C1124	D-6	C1407	D-3	R1152	D-6	R1405	D-4		
QR1801	B-5	**Coil**		C1143	B-7	C1408	D-3	R1153	C-7	R1407	D-3		
Connector		L1120	C-8	C1150	D-6	C1601	B-5	R1154	D-7	R1409	D-3		
P1101	E-8	L1121	B-8	C1151	C-6	C1602	B-5	R1155	D-7	R1410	B-2		

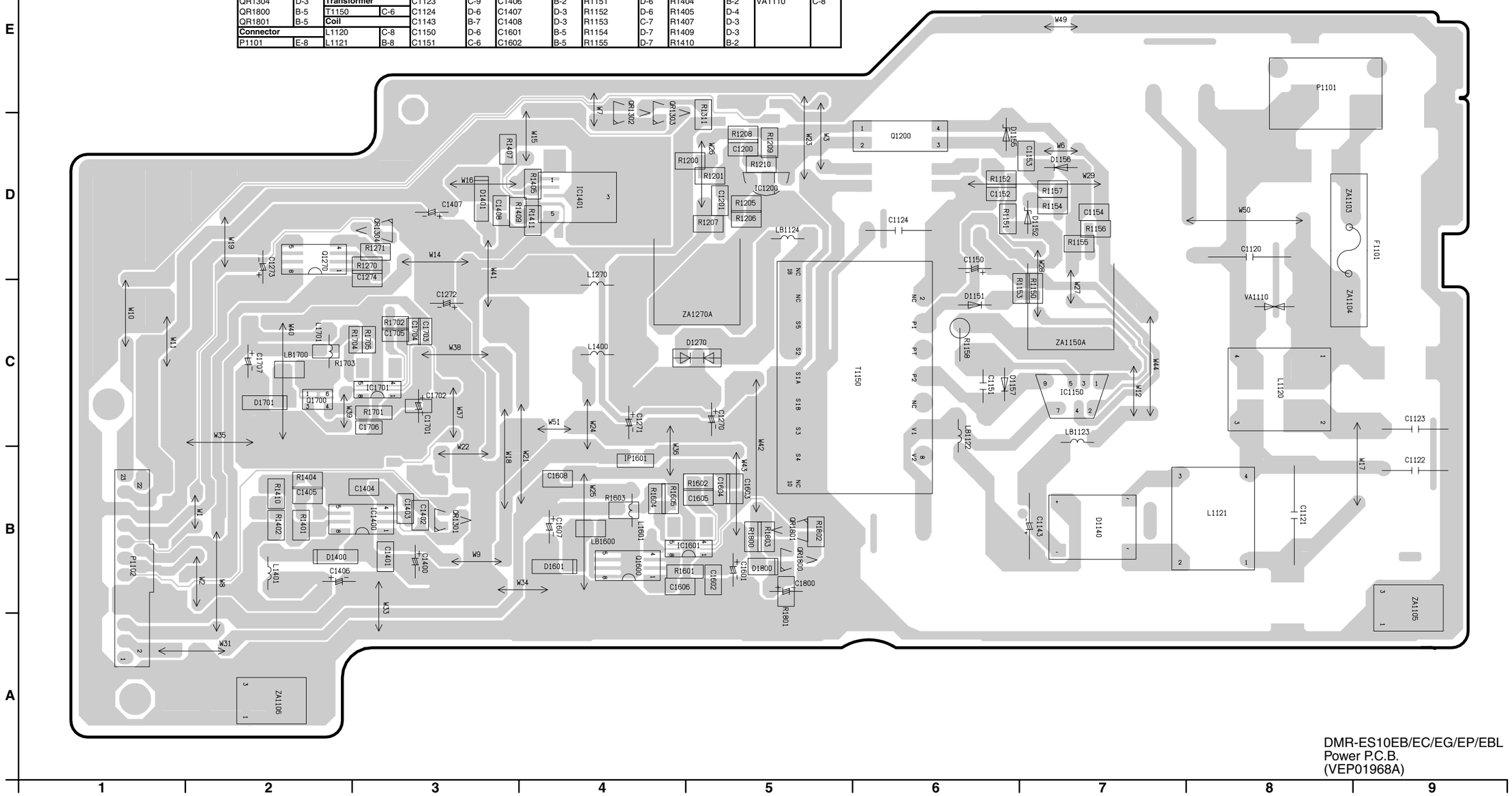

19.2. Main P.C.B.

19.2.1. Main P.C.B. (1/4 Section)

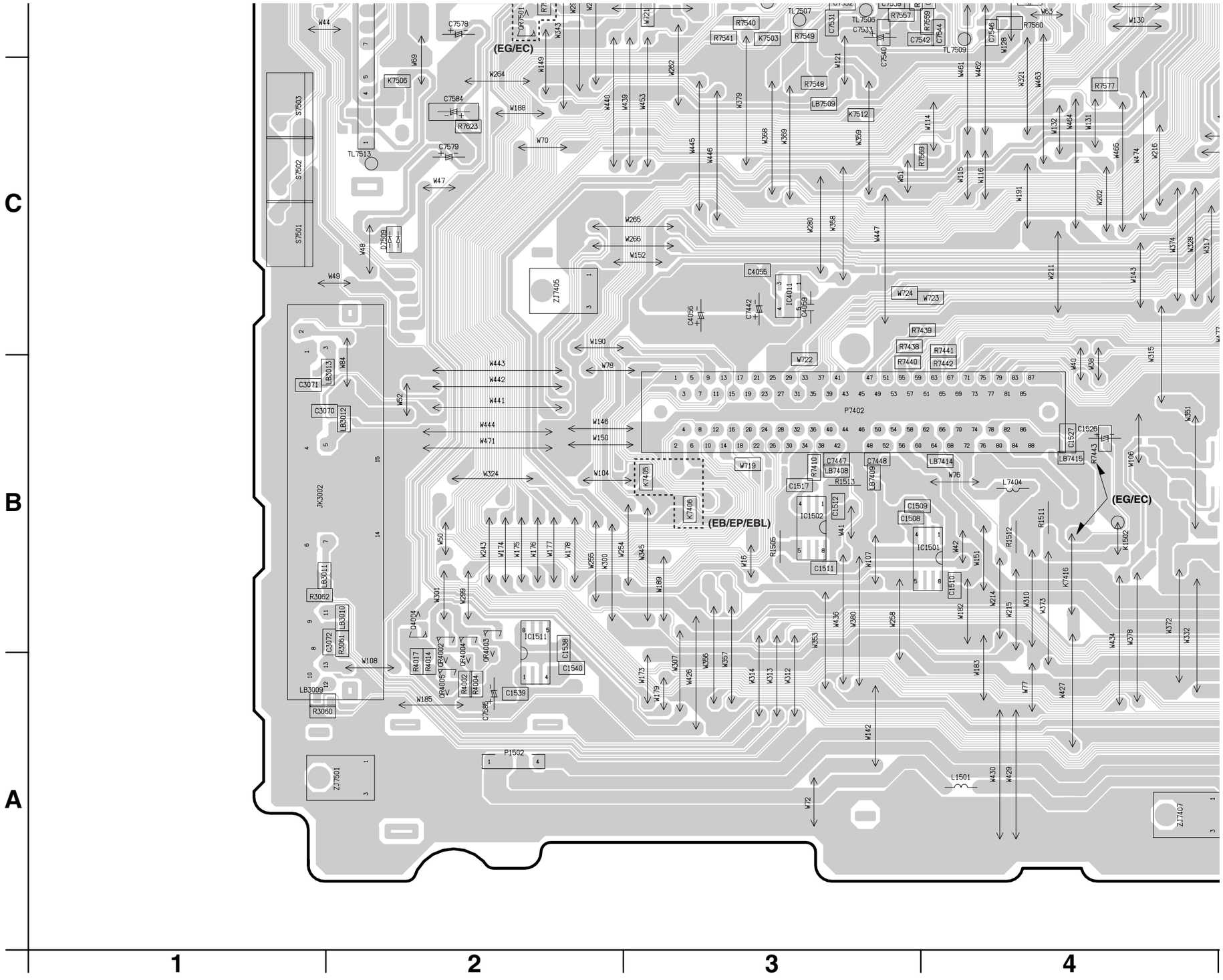

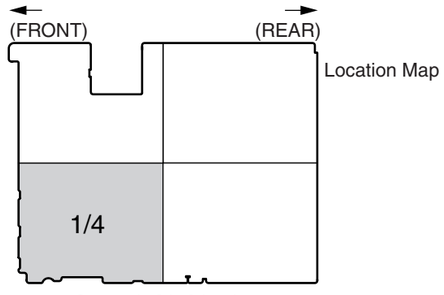

DMR-ES10EB/EC/EG/EP/EBL
Main P.C.B.
VEP79107B:ES10EB,VEP79107D:ES10EC
VEP79107A:ES10EG,VEP79107M:ES10EP/EBL
(1/4 Section)

19.2.2. Main P.C.B. (2/4 Section)

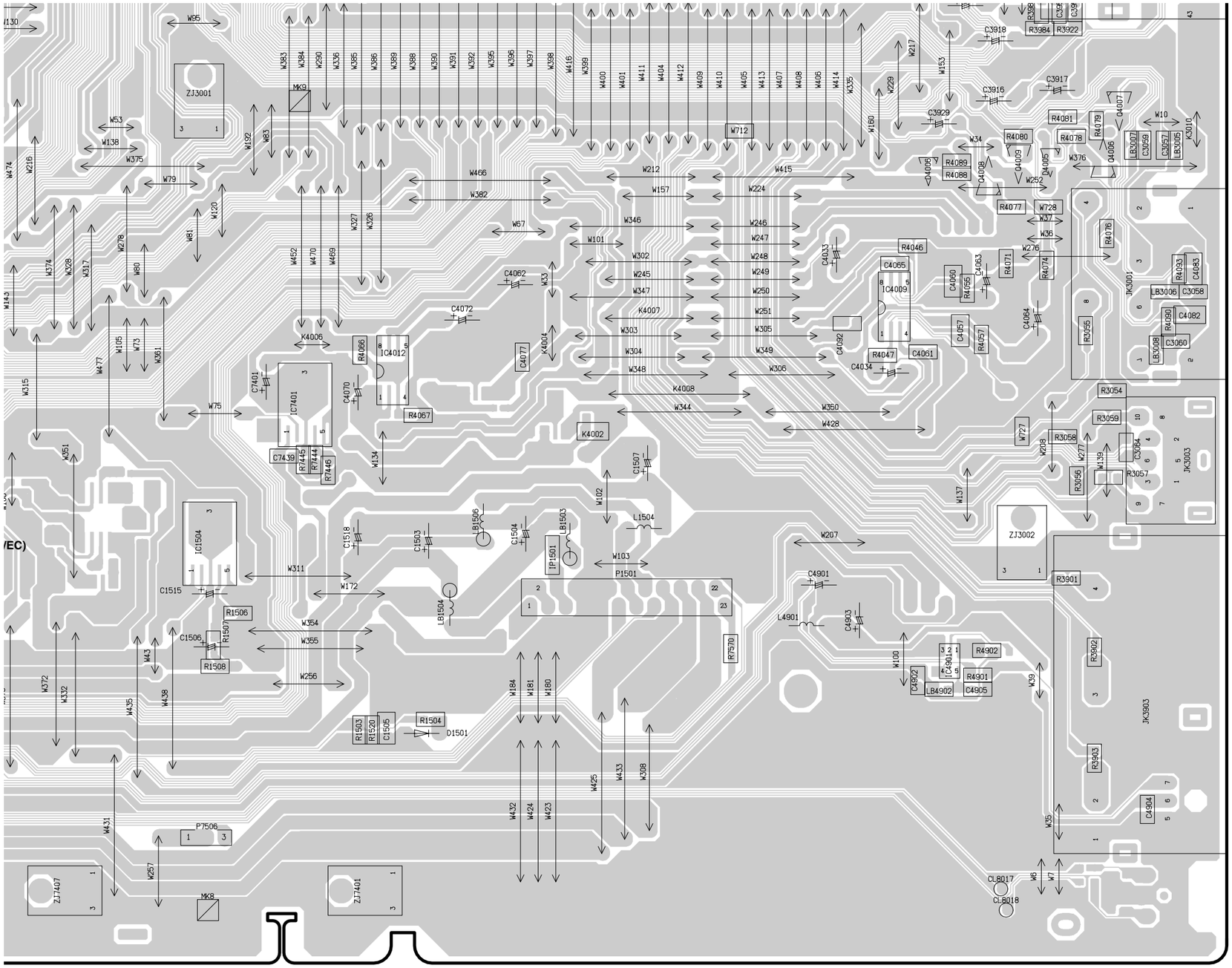

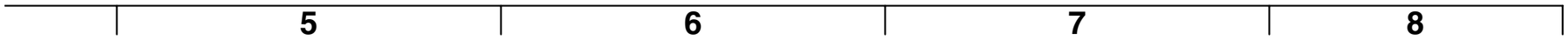

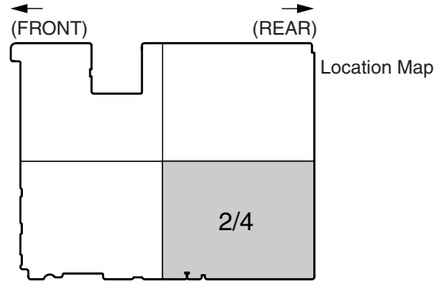

DMR-ES10EB/EC/EG/EP/EBL
Main P.C.B.
VEP79107B:ES10EB,VEP79107D:ES10EC
VEP79107A:ES10EG,VEP79107M:ES10EP/EBL
(1/4 Section)

19.2.3. Main P.C.B. (3/4 Section)

Main P.C.B.

F

E

D

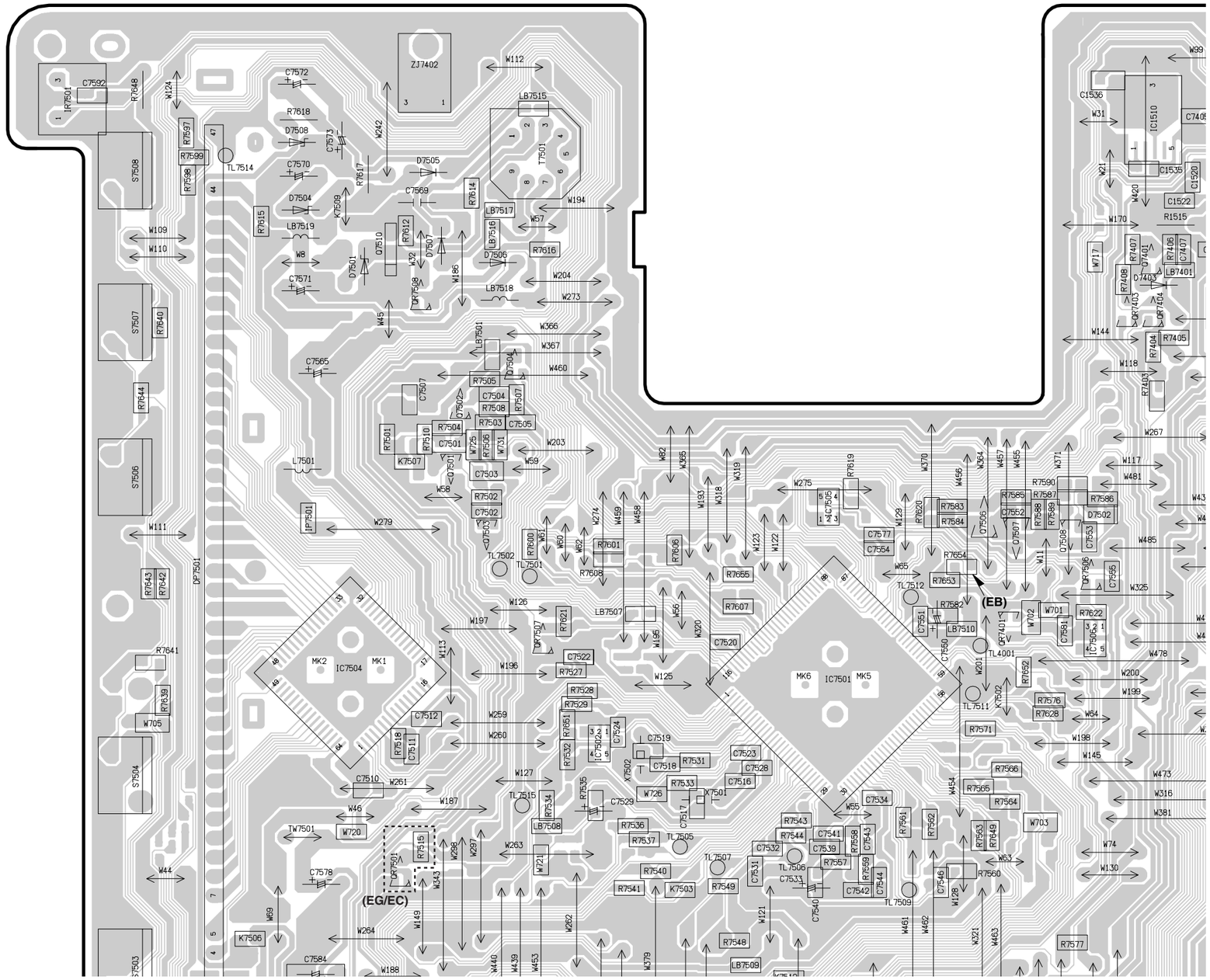

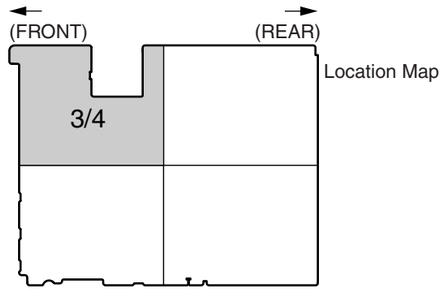

DMR-ES10EB/EC/EG/EP/EBL
Main P.C.B.
VEP79107B:ES10EB,VEP79107D:ES10EC
VEP79107A:ES10EG,VEP79107M:ES10EP/EBL
(1/4 Section)

19.2.4. Main P.C.B. (4/4 Section)

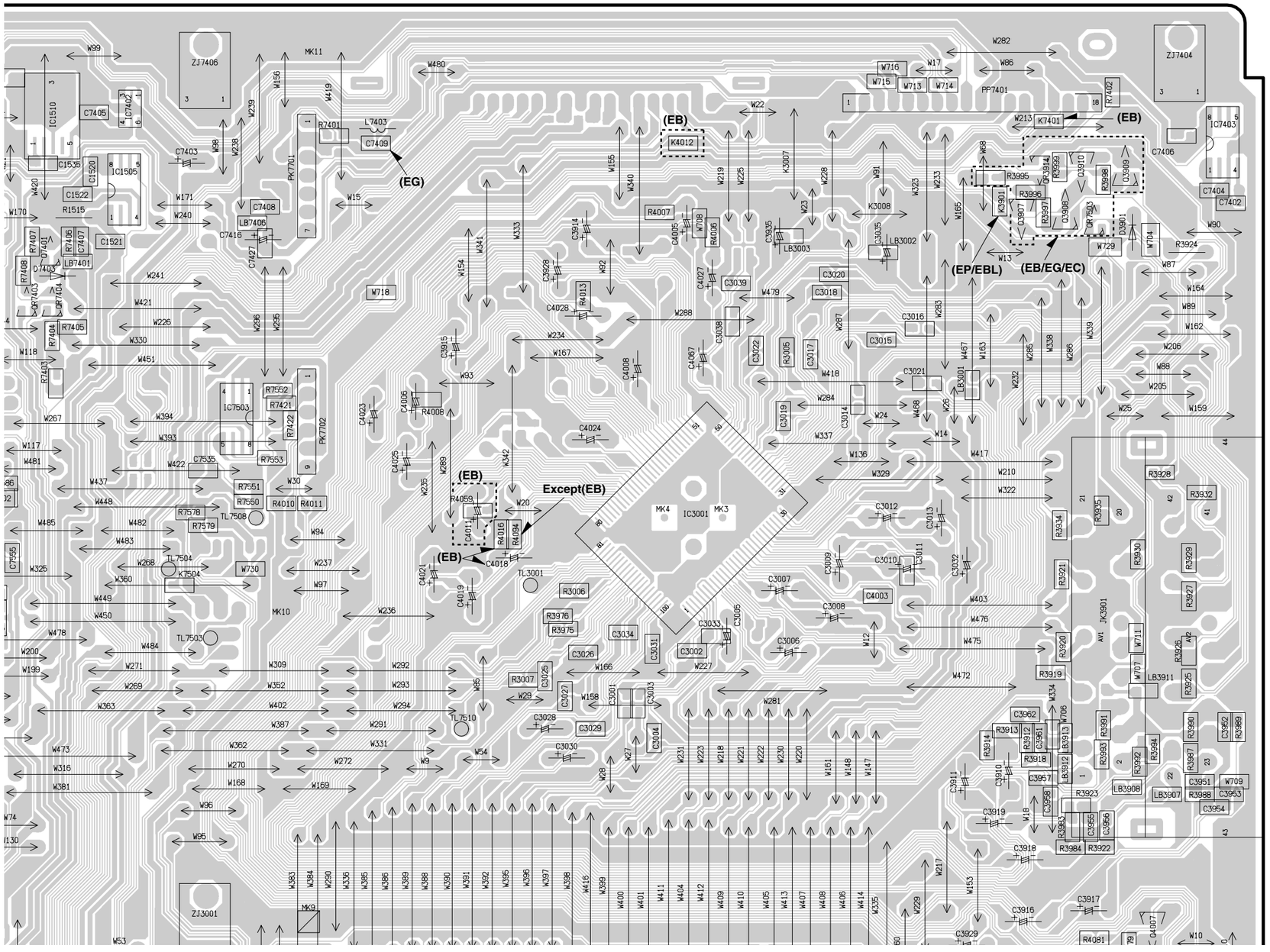

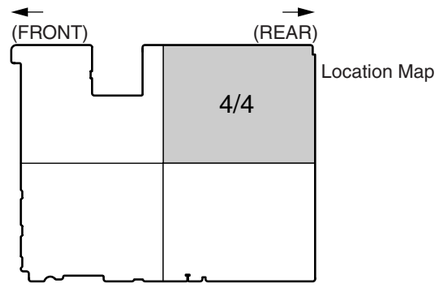

DMR-ES10EB/EC/EG/EP/EBL
Main P.C.B.
VEP79107B:ES10EB,VEP79107D:ES10EC
VEP79107A:ES10EG,VEP79107M:ES10EP/EBL
(1/4 Section)

19.2.5. Main P.C.B. Address Information

Main P.C.B.

Integrated Circuit		TL7510	D-6	LB7408	B-3	C3033	D-6	C4903	B-7	R1503	A-5	R4013	E-6	R7544	D-3
IC1501	B-4	TL7511	D-4	LB7409	B-3	C3034	D-6	C4904	A-8	R1504	B-5	R4014	B-2	R7548	C-3
IC1502	B-3	TL7512	D-4	LB7414	B-4	C3035	E-7	C4905	B-7	R1505	B-3	R4016	E-6	R7549	D-3
IC1504	B-5	TL7513	C-2	LB7415	B-4	C3038	E-6	C7401	B-5	R1506	B-5	R4017	B-2	R7550	E-5
IC1505	F-5	TL7514	F-2	LB7501	E-2	C3039	E-6	C7402	F-8	R1507	B-5	R4046	C-7	R7551	E-5
IC1510	F-4	TL7515	D-3	LB7507	D-3	C3057	C-8	C7403	F-5	R1508	B-5	R4047	C-7	R7552	E-5
IC1511	B-2	TW7501	D-2	LB7508	D-3	C3058	C-8	C7404	F-8	R1511	B-4	R4055	C-7	R7553	E-5
IC3001	E-6	**Connector**		LB7509	C-3	C3059	C-8	C7405	F-4	R1512	B-4	R4057	C-7	R7557	D-3
IC4009	C-7	JK3001	C-8	LB7510	D-4	C3060	C-8	C7406	F-8	R1513	B-3	R4059	E-6	R7558	D-3
IC4011	C-3	JK3002	B-2	LB7515	F-3	C3064	B-8	C7407	E-4	R1515	F-4	R4066	C-5	R7559	D-4
IC4012	C-5	JK3003	B-8	LB7516	E-2	C3070	B-2	C7408	F-5	R1520	A-5	R4067	B-5	R7560	D-4
IC4901	B-7	JK3901	D-8	LB7517	F-2	C3071	B-1	C7409	F-5	R3006	D-6	R4071	C-7	R7561	D-4
IC7401	B-5	JK3903	B-8	LB7518	E-2	C3072	B-2	C7416	E-5	R3007	D-6	R4074	C-7	R7562	D-4
IC7402	F-5	P1501	B-6	LB7519	E-2	C3910	D-7	C7427	E-5	R3054	C-8	R4076	C-8	R7563	D-4
IC7403	F-8	P1502	A-2	**Capacitor**		C3911	D-7	C7439	B-5	R3055	C-7	R4077	C-7	R7564	D-4
IC7501	D-3	P7402	B-3	C1503	B-6	C3914	E-6	C7447	B-3	R3056	B-7	R4078	C-7	R7565	D-4
IC7502	D-3	P7506	A-5	C1504	B-6	C3915	E-6	C7448	B-3	R3057	B-8	R4079	C-8	R7566	D-4
IC7503	E-5	PP7401	F-7	C1505	B-5	C3916	C-7	C7501	E-2	R3058	B-7	R4080	C-7	R7569	C-3
IC7504	D-2	**Diode**		C1506	B-5	C3917	C-7	C7502	E-2	R3059	B-8	R4081	C-7	R7570	B-6
IC7505	E-3	D1501	A-5	C1507	B-6	C3918	D-7	C7503	E-2	R3060	A-1	R4088	C-7	R7571	D-4
IC7506	D-4	D3901	E-8	C1508	B-3	C3919	D-7	C7504	E-2	R3061	B-2	R4089	C-7	R7576	D-4
Transistor		D4005	C-7	C1509	B-3	C3928	E-6	C7505	E-3	R3062	B-1	R4090	C-8	R7577	C-4
Q3907	E-7	D4006	C-7	C1510	B-4	C3929	C-7	C7507	E-2	R3901	B-7	R4093	C-8	R7578	E-5
Q3908	F-7	D7403	E-4	C1511	B-3	C3935	E-7	C7510	D-2	R3902	B-8	R4094	E-6	R7579	E-5
Q3909	F-8	D7501	E-2	C1512	B-3	C3951	D-8	C7511	D-2	R3903	A-8	R4901	B-7	R7582	D-4
Q3910	F-7	D7502	E-4	C1515	B-5	C3952	D-8	C7512	D-2	R3912	D-7	R4902	B-7	R7583	E-4
Q4004	B-2	D7504	F-2	C1517	B-3	C3953	D-8	C7516	D-3	R3913	D-7	R7401	F-5	R7584	E-4
Q4006	C-8	D7505	F-2	C1518	B-5	C3954	D-8	C7517	D-3	R3914	D-7	R7402	F-7	R7585	E-4
Q4007	C-8	D7506	E-2	C1520	F-4	C3955	D-7	C7518	D-3	R3918	D-7	R7403	E-4	R7586	E-4
Q4008	C-7	D7507	E-2	C1521	E-5	C3956	D-7	C7519	D-3	R3919	D-7	R7404	E-4	R7587	E-4
Q4009	C-7	D7508	F-2	C1522	F-4	C3957	D-7	C7520	D-3	R3920	D-7	R7405	E-4	R7588	E-4
Q7401	E-4	D7509	C-2	C1526	B-4	C3958	D-7	C7522	D-3	R3921	D-7	R7406	E-4	R7589	E-4
Q7501	E-2	**Crystal Osillator**		C1527	B-4	C3961	D-7	C7523	D-3	R3922	D-7	R7407	E-4	R7590	E-4
Q7502	E-2	X7501	D-3	C1535	F-4	C3962	D-7	C7524	D-3	R3923	D-7	R7408	E-4	R7597	F-2
Q7503	E-2	X7502	D-3	C1536	F-4	C4003	D-7	C7528	D-3	R3924	E-8	R7410	B-3	R7598	F-2
Q7504	E-3	**IC Protector**		C1538	B-2	C4005	E-6	C7529	D-3	R3925	D-8	R7421	E-5	R7599	F-2
Q7506	E-4	IP1501	B-6	C1539	A-2	C4006	E-5	C7531	D-3	R3926	D-8	R7422	E-5	R7600	E-3
Q7507	E-4	IP7501	E-2	C1540	A-2	C4008	E-6	C7532	D-3	R3927	D-8	R7438	C-3	R7601	E-3
Q7508	E-4	**Coil**		C3001	D-6	C4011	E-6	C7533	D-3	R3928	E-8	R7439	C-3	R7606	E-3
Q7510	E-2	L1501	A-4	C3002	D-6	C4018	D-6	C7534	D-4	R3929	D-8	R7440	C-3	R7607	D-3
Transistor-resistor		L1504	B-6	C3003	D-6	C4019	D-6	C7535	E-5	R3930	D-8	R7441	C-4	R7608	E-3
QR3914	F-7	L4901	B-7	C3004	D-6	C4021	D-5	C7539	D-3	R3932	E-8	R7442	C-4	R7612	E-2
QR4002	B-2	L7403	F-5	C3005	D-6	C4023	E-5	C7540	D-3	R3934	E-7	R7443	B-4	R7614	F-2
QR4003	B-2	L7404	B-4	C3006	D-7	C4024	E-6	C7541	D-3	R3935	E-7	R7444	B-5	R7615	F-2
QR4004	B-2	L7501	E-2	C3007	D-7	C4025	E-5	C7542	D-3	R3975	D-6	R7445	B-5	R7616	E-3
QR4005	A-2	LB1503	B-6	C3008	D-7	C4027	E-6	C7543	D-4	R3976	D-6	R7446	B-5	R7617	F-2
QR7401	D-4	LB1504	B-6	C3009	D-7	C4028	E-6	C7544	D-4	R3983	D-7	R7501	E-2	R7618	F-2
QR7403	E-4	LB1506	B-6	C3010	D-7	C4033	C-7	C7546	D-4	R3984	D-7	R7502	E-2	R7619	E-3
QR7404	E-4	LB3001	E-7	C3011	D-7	C4034	C-7	C7550	D-4	R3987	D-8	R7503	E-2	R7620	E-4
QR7501	D-2	LB3002	E-7	C3012	E-7	C4055	C-3	C7551	D-4	R3988	D-8	R7504	E-2	R7621	D-3
QR7503	E-7	LB3003	E-7	C3013	E-7	C4056	C-3	C7552	E-4	R3989	D-8	R7505	E-2	R7622	D-4
QR7506	D-4	LB3005	C-8	C3014	E-7	C4057	C-7	C7553	E-4	R3990	D-8	R7506	E-2	R7623	C-2
QR7507	D-3	LB3006	C-8	C3015	E-7	C4059	C-3	C7554	E-4	R3991	D-7	R7507	E-3	R7628	D-4
QR7508	E-2	LB3007	C-8	C3016	E-7	C4060	C-7	C7555	D-4	R3992	D-8	R7508	E-2	R7639	D-1
Test Point		LB3008	C-8	C3017	E-7	C4061	C-7	C7565	E-2	R3993	D-7	R7510	E-2	R7640	E-1
CL8017	A-7	LB3009	A-1	C3018	E-7	C4062	C-6	C7569	F-2	R3994	D-8	R7515	D-2	R7641	D-1
CL8018	A-7	LB3010	B-2	C3019	E-6	C4063	C-7	C7570	F-2	R3995	F-7	R7518	D-2	R7642	D-1
TL3001	D-6	LB3011	B-2	C3020	E-7	C4064	C-7	C7571	E-2	R3996	F-7	R7527	D-3	R7643	D-1
TL4001	D-4	LB3012	B-2	C3021	E-7	C4065	C-7	C7572	F-2	R3997	F-7	R7528	D-3	R7644	E-1
TL7501	D-3	LB3013	B-2	C3022	E-6	C4067	E-6	C7573	F-2	R3998	F-7	R7529	D-3	R7648	F-1
TL7502	D-2	LB3907	D-8	C3025	D-6	C4070	B-5	C7577	E-4	R3999	F-7	R7531	D-3	R7649	D-4
TL7503	D-5	LB3908	D-8	C3026	D-6	C4072	C-6	C7578	D-2	R4002	A-2	R7532	D-3	R7651	D-3
TL7504	D-5	LB3911	D-8	C3027	D-6	C4077	C-6	C7579	C-2	R4004	A-2	R7533	D-3	R7652	D-4
TL7505	D-3	LB3912	D-7	C3028	D-6	C4082	C-8	C7581	D-4	R4006	E-6	R7534	D-3	R7653	D-4
TL7506	D-3	LB3913	D-7	C3029	D-6	C4083	C-8	C7584	C-2	R4007	F-6	R7535	D-3	R7654	E-4
TL7507	D-3	LB4902	B-7	C3030	D-6	C4092	C-7	C7585	A-2	R4008	E-5	R7536	D-3	R7655	D-3
TL7508	E-5	LB7401	E-4	C3031	D-6	C4901	B-7	C7592	F-1	R4010	E-5	R7537	D-3	**Transformer**	
TL7509	D-4	LB7406	E-5	C3032	D-7	C4902	B-7	**Resistor**		R4011	E-5	R7543	D-3	T7501	F-3

19.3. Tuner P.C.B., Front (L) P.C.B.

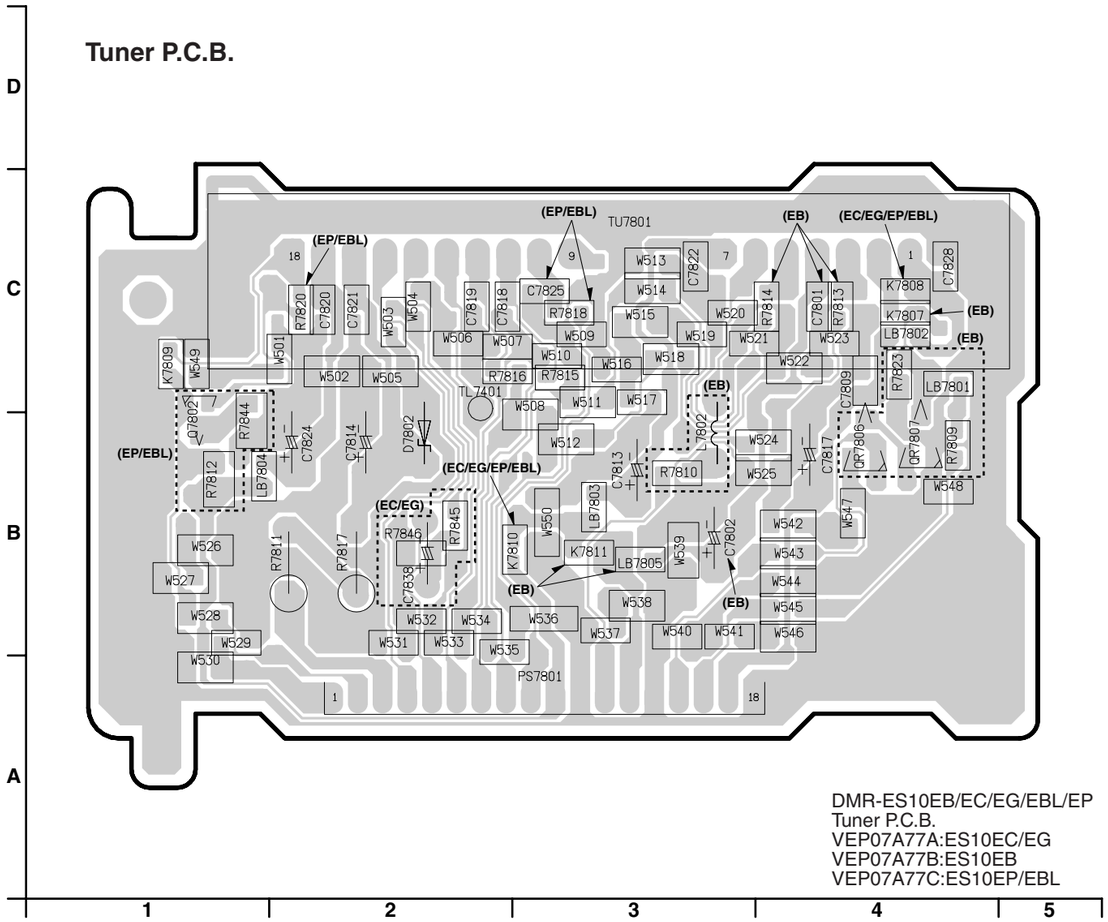

DMR-ES10EB/EC/EG/EBL/EP
Tuner P.C.B.
VEP07A77A:ES10EC/EG
VEP07A77B:ES10EB
VEP07A77C:ES10EP/EBL

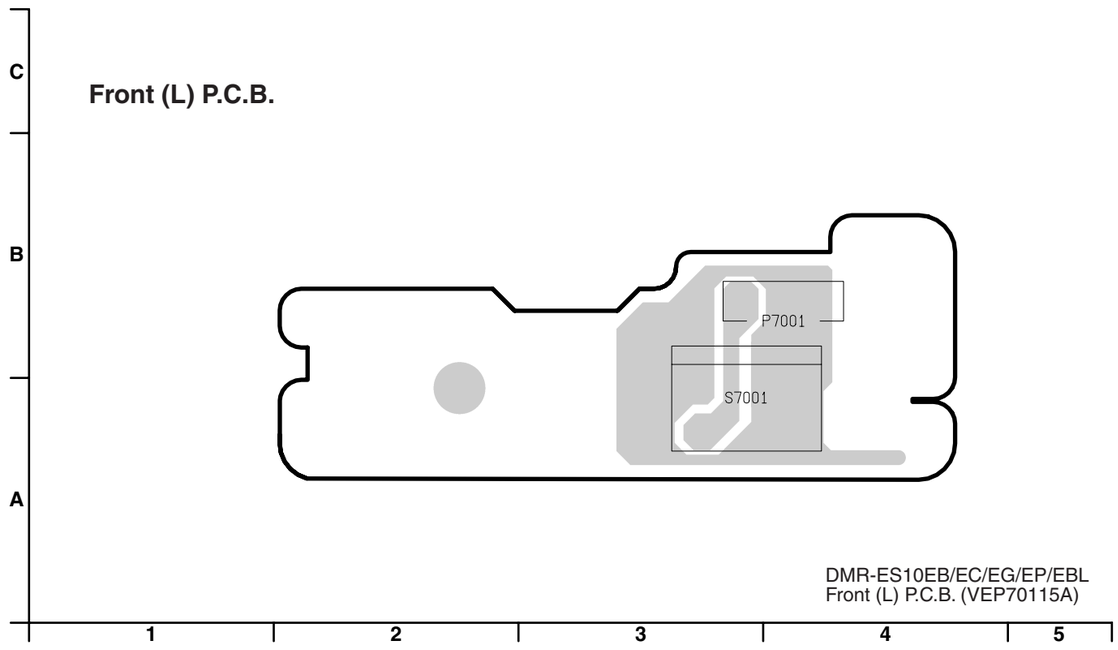

DMR-ES10EB/EC/EG/EP/EBL
Front (L) P.C.B. (VEP70115A)

19.4. Nicam Decoder P.C.B.

For ES10EB/EC/EP/EBL

Nicam Decoder P.C.B.

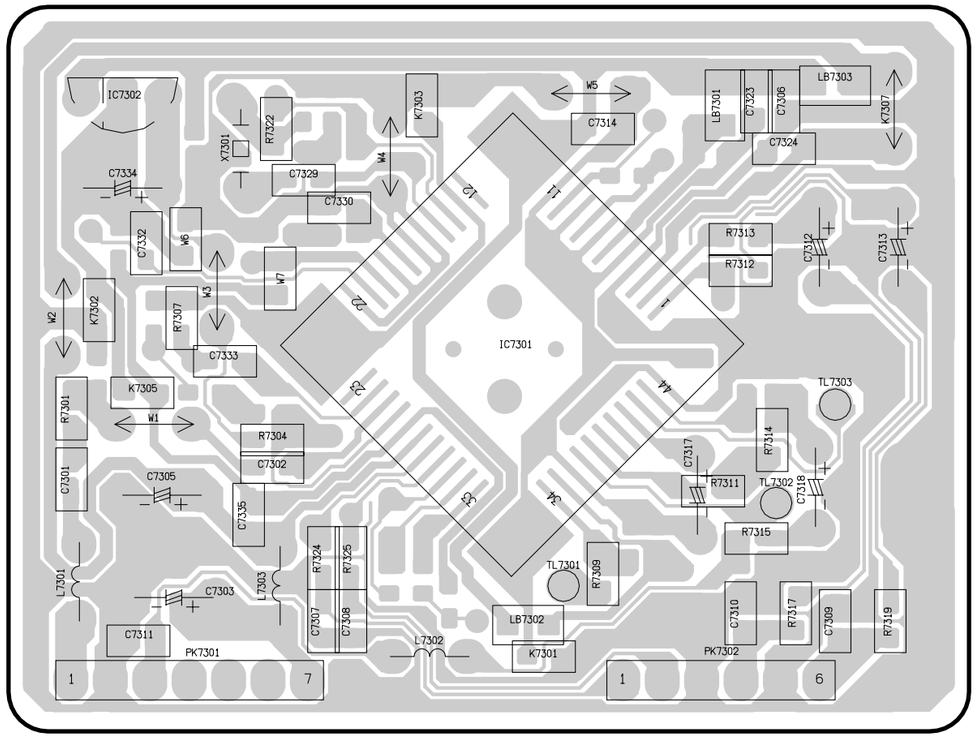

DMR-ES10EB/EC/EP/EBL
Nicam Decoder P.C.B. (VEP07A51A)

For ES10EG

Nicam Decoder P.C.B.

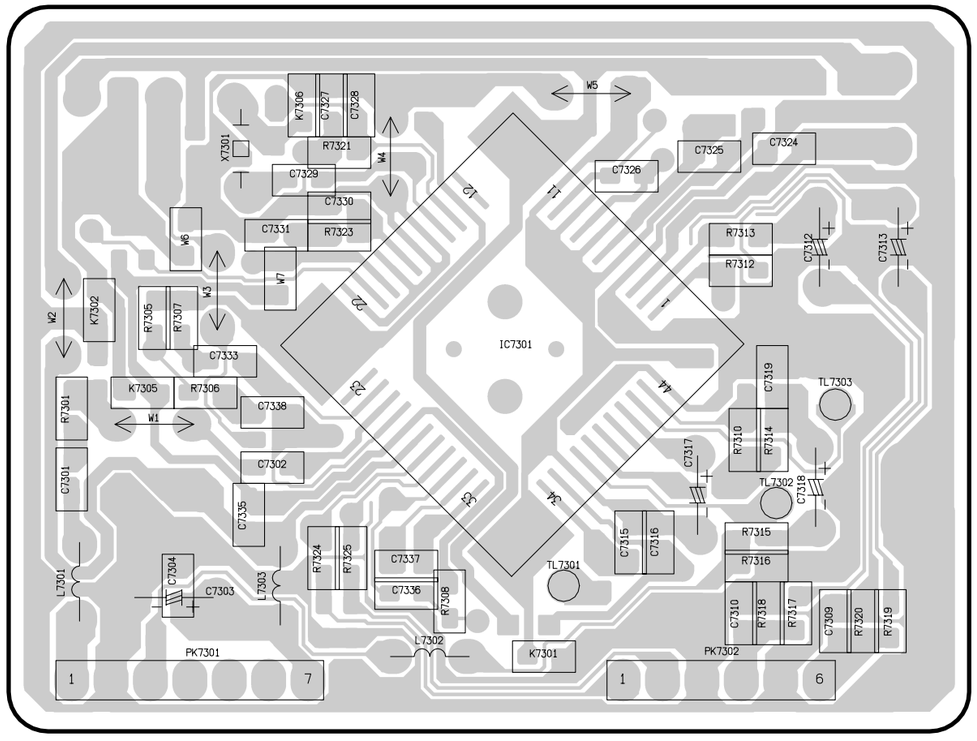

DMR-ES10EG
Nicam Decoder P.C.B. (VEP07A51E)

20 Exploded Views

20.1. Casing Parts & Mechanism Section

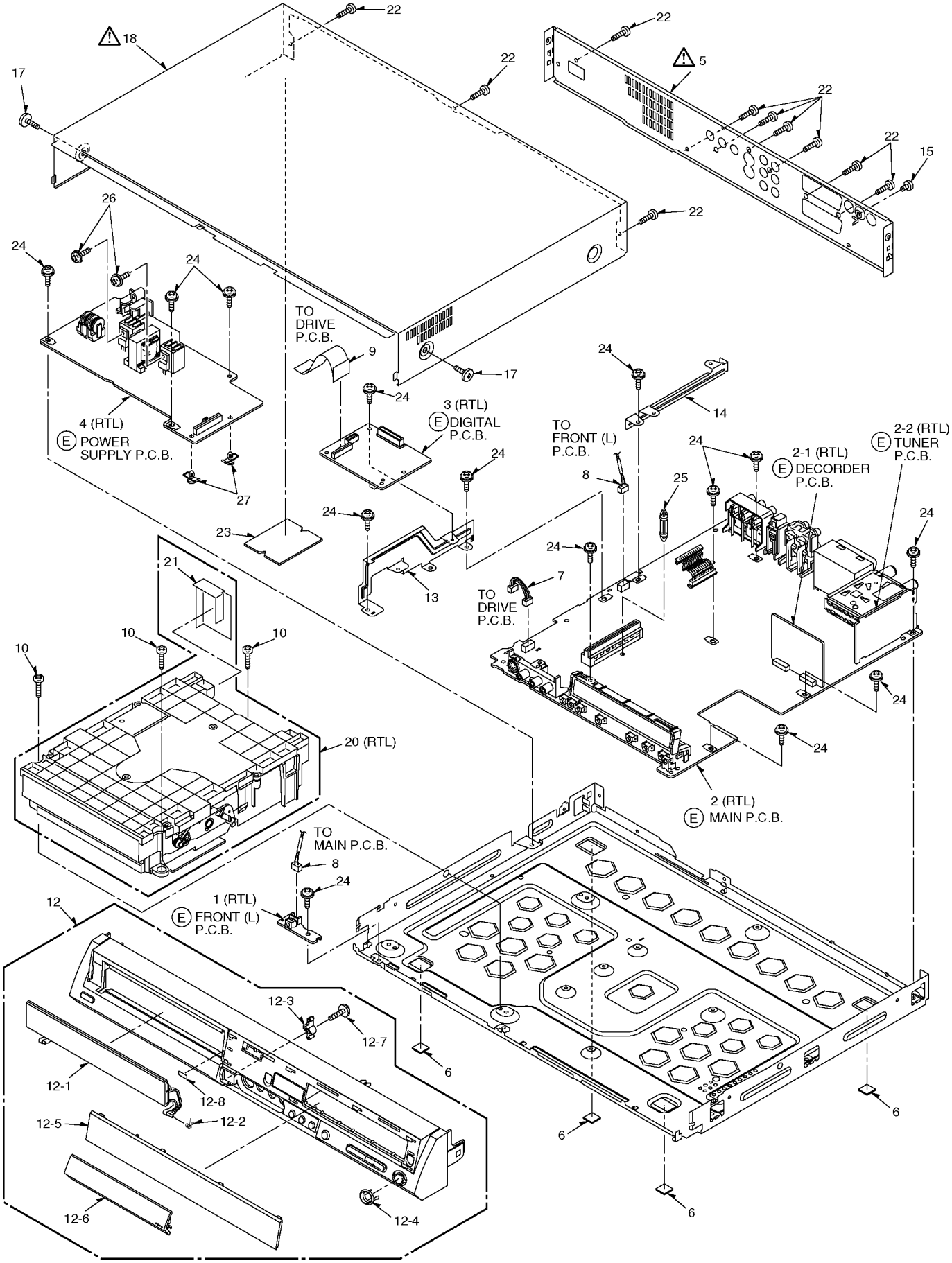

20.2. Packing & Accessories Section

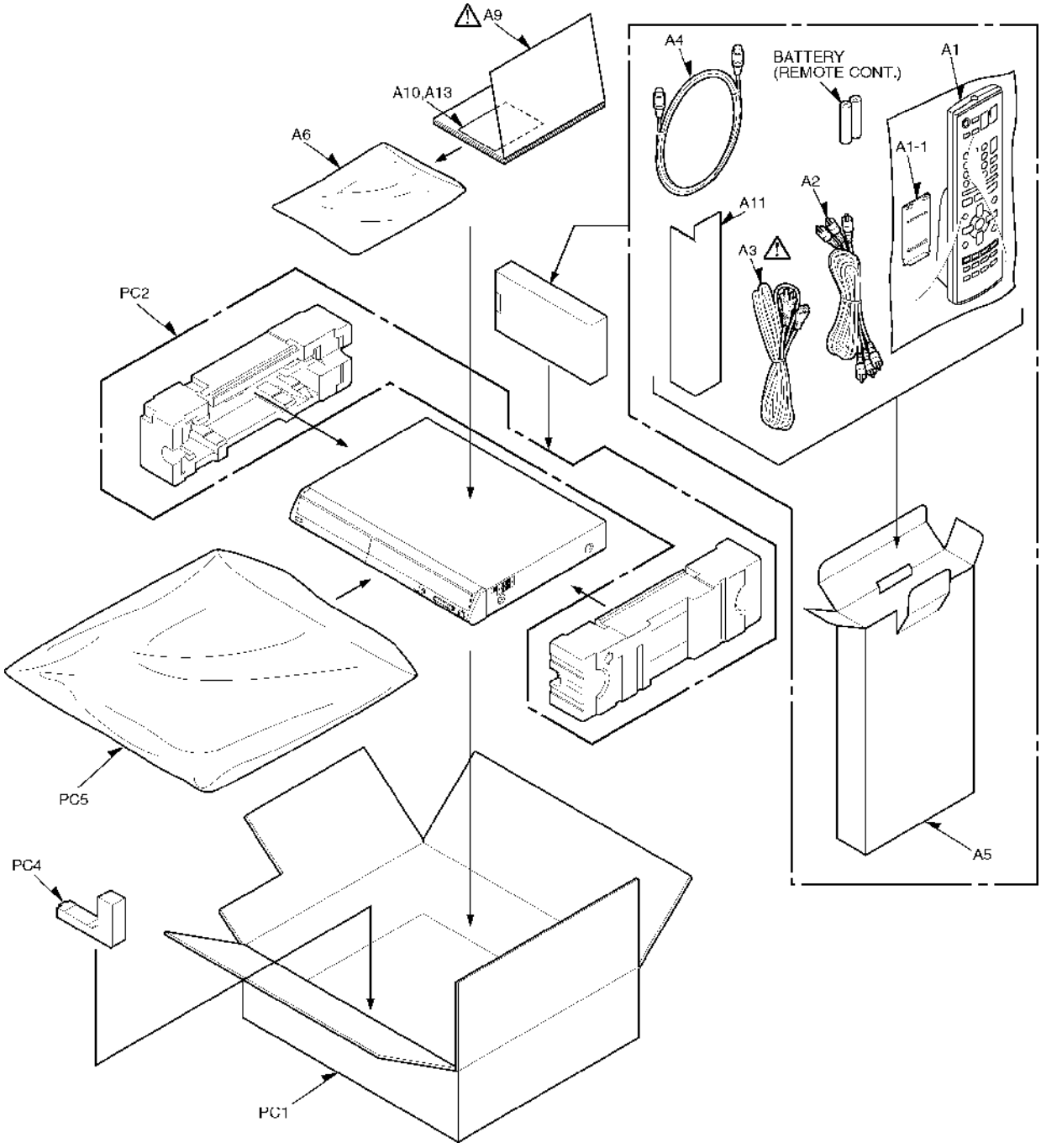

21 Replacement Parts List

Notes:

*Important safety notice:

Components identified by ⚠ mark have special characteristics important for safety.

Furthermore, special parts which have purposes of fire-retardant (resistors), high-quality sound (capacitors), low-noise (resistors), etc. are used.

When replacing any of components, be sure to use only manufactures specified parts shown in the parts list.

*Warning: This product uses a laser diode. Refer to caution statements.

*Capacity values are in microfarads (μF) unless specified otherwise, P=Pico-farads (pF), F=Farads (F).

*Resistance values are in ohms, unless specified otherwise, 1K=1,000 (OHM), 1M=1,000k (OHM).

*The marking (RTL) indicates the retention time is limited for this item. After the discontinuation of this assembly in production, it will no longer be available.

*"<IA>-<ID>", marks in Remarks indicate languages of instruction manuals. [<IA>: German Italian Datch, <IB>: English, <IC>: Polish, <ID>: English]

*All parts except parts mentioned [SPC] in the Remarks column are supplied from PAVCG.

*Parts mentioned [SPC] are supplied from PAVC

Ref. No.	Part No.	Part Name & Description	Pcs	Remarks
n	01	CASING/ACCESSORY/PACKING		
1	VEP70115A	FRONT(L) P.C.B.	1	(RTL)
2	VEP79107B	MAIN P.C.B.	1	(RTL) (EB)
2	VEP79107D	MAIN P.C.B.	1	(RTL) (EC)
2	VEP79107A	MAIN P.C.B.	1	(RTL) (EG)
2	VEP79107M	MAIN P.C.B.	1	(RTL) (EBL,EP)
2-1	VEP07A51A	NICAM DECORDER P.C.B.	1	(RTL) (EB,EBL,EP,EC)
2-1	VEP07A51E	NICAM DECORDER P.C.B.	1	(RTL) (EG-K)
2-2	VEP07A77A	TUNER P.C.B.	1	(RTL) (EG,EC)
2-2	VEP07A77B	TUNER P.C.B.	1	(RTL) (EB)
2-2	VEP07A77C	TUNER P.C.B.	1	(RTL) (EBL,EP)
3	RFKBES10EB	DIGITAL P.C.B.	1	(RTL) (EB)
3	RFKBES10EC	DIGITAL P.C.B.	1	(RTL) (EC)
3	RFKBES10EBL	DIGITAL P.C.B.	1	(RTL) (EBL)
3	RFKBES10EP	DIGITAL P.C.B.	1	(RTL) (EP)
3	VEP79104B	DIGITAL P.C.B.	1	(RTL) (EG)
4	VEP01968A	POWER SUPPLY P.C.B.	1	(RTL)
5	RGR0354C-B	REAR PANEL	1	(EB,EBL) ⚠
5	RGR0354C-A	REAR PANEL	1	(EG,EP,EC) ⚠
6	RKA0144-K	FOOT RUBBER	4	
7	VEE1A60	WIRE WITH CONNECTOR(4P)	1	
8	VEE1A61	WIRE WITH CONNECTOR(2P)	1	
9	VWJ1775	FFC(40P)	1	
10	RHD30115-3	SCREW	3	
12	RYP1267D-K	FRONT PANEL ASS'Y1	1	(K)
12	RYP1267E-S	FRONT PANEL ASS'Y1	1	(EB,EBL)
12	RYP1267D-S	FRONT PANEL ASS'Y1	1	(EG-S,EP,EC-S)
12-1	RKF0728-K	TRAY DOOR	1	
12-2	VMB3410	TRAY SPRING	1	
12-3	RMR1698-S	SHAFT HOLDER	1	
12-4	RGK1885-S	REC BUTTON RING	1	
12-5	RGK1886-Q	FL ORNAMENT	1	
12-6	RKF0729B-K	PANEL DOOR	1	(K)
12-6	RKF0729B-S	PANEL DOOR	1	(S)
12-7	RHD26045	SCREW	1	
12-8	RMX0302	DOOR DAMPER	1	
13	RMA1915	DIGITAL ANGLE	1	
14	RMA1913	POWER P.C.B. ANGLE	1	
15	XSN3+4FJK	SCREW	1	
17	RHD30113-1K	SCREW	2	(K)
17	RHD30113	SCREW	2	(S)
18	RKM0532-K	TOP CASE	1	(K) ⚠
18	RKM0532-S	TOP CASE	1	(S) ⚠
20	RFKNVXY1867	RAM DRIVE UNIT	1	(RTL) (SPC)
21	RMV0302	BARRIER	1	(SPC)
22	VHD0690	SCREW	10	
23	RMV0301	BARRIER	1	
24	RHD30111-3	SCREW	14	
25	RMX0298	PCB SPACER	1	
26	XYN3+F8FJ	SCREW	2	
27	RMX0323	PCB SPACER	2	
A1	EUR7720KM0	REMOTE CONTROL ASS'Y	1	(EB,EBL)
A1	EUR7720KL0	REMOTE CONTROL ASS'Y	1	(EG,EP,EC)
A1-1	UR77EC2003	BATTERY COVER	1	
A2	RJA0044-3C	AC CORD	1	(EB,EBL) ⚠
A2	RJA0043-1C	AC CORD	1	(EG,EP,EC) ⚠
A3	K2KA6CA00001	AV CORD	1	
A4	K1TWACC00001	RF COAXIAL CABLE	1	
A5	RPQFD0001	ACCESSORY CASE	1	
A6	XZB24X37C04X	POLYETHYLENE BAG(F.B)	1	(EB,EBL,EP,EC)
A6	RPFD0005	POLYETHYLENE BAG(F.B)	1	(EG-K)
A9	RQT8013-D	OPERATING INSTRUCTIONS	1	<IA>(EG,EC) ⚠
A9	RQT8016-B	OPERATING INSTRUCTIONS	1	<IB>(EB,EBL) ⚠
A9	RQT8017-R	OPERATING INSTRUCTIONS	1	<IC>(EP) ⚠
A9	RQT8020-L	OPERATING INSTRUCTIONS	1	<ID>(EC) ⚠
A10	RQCC2704	DVD MEDIA SHEET	1	
A11	RPQ1594	PAD	1	
A13	RQCA1353	QUICK START GUIDE	1	(EB,EBL)
PC1	RPG7506	PACKING CASE	1	(EG-S)
PC1	RPG7507	PACKING CASE	1	(EB)
PC1	RPG7508	PACKING CASE	1	(EBL)
PC1	RPG7509	PACKING CASE	1	(EP)
PC1	RPG7586	PACKING CASE	1	(EG-K)
PC1	RPG7588	PACKING CASE	1	(EC-S)
PC1	RPG7589	PACKING CASE	1	(EC-K)
PC2	RPN1790	CUSHION	1	
PC4	RPN1806	CUSHION(C)	1	
PC5	RPFD0004	MIRAMAT BAG	1	
n	02	VEP79107A/B/D/M		(MAIN P.C.B.)
C1503	F2A1A2210063	10V 220U	1	
C1504	F2A1E1010067	25V 100U	1	
C1505	F1J0J106A014	6.3V 10U	1	
C1506	F2A1A470A388	10V 47U	1	
C1507	F2A1A101A389	10V 100U	1	
C1508	F1H1H1030006	50V 0.01U	1	
C1509	F1H0J1050012	6.3V 1U	1	
C1510	F1H1A105A028	10V 1U	1	
C1511,12	F1H0J1050012	6.3V 1U	2	
C1515	F2A1A470A388	10V 47U	1	

Ref. No.	Part No.	Part Name & Description	Pcs	Remarks
C1517	ECJ1VC1H471J	50V 470P	1	
C1518	F2A1A101A389	10V 100U	1	
C1520	F1H1A105A028	10V 1U	1	
C1521	F1H0J1050012	6.3V 1U	1	
C1522	ECJ1VC1H331J	50V 330P	1	
C1526	F2A1A101A389	10V 100U	1	
C1527	F1J0J106A014	6.3V 10U	1	
C1535	F1H1A105A028	10V 1U	1	
C1536	F1J0J106A014	6.3V 10U	1	
C1538	F1H1A105A028	10V 1U	1	
C1539	F1H0J1050012	6.3V 1U	1	
C1540	F1H1H1030006	50V 0.01U	1	
C3001	F1H1C104A042	16V 0.1U	1	
C3002	F1H1H1030006	50V 0.01U	1	
C3003,04	F1H1C104A042	16V 0.1U	2	
C3005,06	F2A0J471A016	6.3V 470U	2	
C3007	F2A1A4710038	10V 470U	1	
C3008	F2A1A1010072	10V 100U	1	
C3009	F2A1A4710038	10V 470U	1	
C3010	F2A1A1010072	10V 100U	1	
C3011	F1H1C104A042	16V 0.1U	1	
C3012	F2A1A4710038	10V 470U	1	
C3013	F2A1A1010072	10V 100U	1	(EG,EBL,EP,EC)
C3013	F2A1E4700048	25V 47U	1	(EB)
C3014-22	F1H1C104A042	16V 0.1U	9	
C3025	F1H1C104A042	16V 0.1U	1	
C3026	F1H0J1050012	6.3V 1U	1	
C3027	F1H1C104A042	16V 0.1U	1	
C3028	ECEA1HKA4R7B	50V 4.7U	1	
C3029	F1H1C104A042	16V 0.1U	1	
C3030	ECEA1HKA4R7B	50V 4.7U	1	
C3031	F1H1H1030006	50V 0.01U	1	
C3032	ECEA0JKA101B	6.3V 100U	1	
C3033,34	F1H1H1030006	50V 0.01U	2	
C3035	ECEA0JKA101B	6.3V 100U	1	
C3038,39	F1H1C104A042	16V 0.1U	2	
C3057	F1H1H222A219	50V 2200P	1	
C3058	ECJ1VC1H471J	50V 470P	1	
C3059	F1H1H222A219	50V 2200P	1	
C3060	ECJ1VC1H471J	50V 470P	1	
C3064	F1H1C104A042	16V 0.1U	1	
C3070,71	F1H1H222A219	50V 2200P	2	
C3072	F1H1C104A042	16V 0.1U	1	
C3910,11	F2A1H100A236	50V 10U	2	
C3914,15	F2A1H100A236	50V 10U	2	
C3916,17	F2A1H1R0A236	50V 1U	2	
C3918,19	F2A1H100A236	50V 10U	2	
C3928	F2A1V100A534	35V 10U	1	
C3929	F2A1H1R0A638	50V 1U	1	
C3935	F2A1E2210050	25V 220U	1	
C3951,52	F1H1H4700004	50V 47P	2	
C3953,54	ECJ1VC1H471J	50V 470P	2	
C3955,56	ECJ1VC1H221J	50V 220P	2	
C3957,58	ECJ1VC1H471J	50V 470P	2	
C3961,62	ECJ1VC1H221J	50V 220P	2	
C4003	F1H0J1050012	6.3V 1U	1	
C4005	F2A1H2200032	50V 22U	1	
C4006	F2A1H100A236	50V 10U	1	
C4008	F2A1E1010067	25V 100U	1	
C4011	F2A1H100A236	50V 10U	1	(EB)

Ref. No.	Part No.	Part Name & Description	Pcs	Remarks
C4018	F2A1H4R7A236	50V 4.7U	1	(EB)
C4019	F2A1V100A534	35V 10U	1	
C4021	F2A1V100A534	35V 10U	1	
C4023	F2A1H100A236	50V 10U	1	
C4024	F2A1E1010067	25V 100U	1	
C4025	F2A1H100A236	50V 10U	1	
C4027	F2A1H2200032	50V 22U	1	
C4028	F2A1H100A236	50V 10U	1	
C4033,34	F2A1C470A637	16V 47U	2	
C4055	F1H1C104A008	16V 0.1U	1	
C4056	F2A1C471A628	16V 470U	1	
C4057	ECJ2VC1H330J	50V 33P	1	
C4059	ECQV1H104JL3	50V 0.1U	1	
C4060	ECJ2VC1H330J	50V 33P	1	
C4061	F1H1C104A008	16V 0.1U	1	
C4062-64	F2A1C470A637	16V 47U	3	
C4065	F1H1C104A008	16V 0.1U	1	
C4067	F2A1E4700048	25V 47U	1	
C4070	F2A1C470A637	16V 47U	1	
C4072	F2A1C470A637	16V 47U	1	
C4077	F1H1C104A008	16V 0.1U	1	
C4082,83	ECJ2VC1H561J	50V 560P	2	
C4092	F2A1C101A637	16V 100U	1	
C4901	F2A0J470A599	6.3V 47U	1	
C4902	F1H1C104A008	16V 0.1U	1	
C4903	F2A1E4700048	25V 47U	1	
C4904,05	F1H1C104A008	16V 0.1U	2	
C7401	F2A1C471A628	16V 470U	1	
C7402	ECJ1VC1H471J	50V 470P	1	
C7403	F2A0J470A599	6.3V 47U	1	
C7404	F1H0J1050012	6.3V 1U	1	
C7405	F1H1C104A042	16V 0.1U	1	
C7406	F1H1A105A028	10V 1U	1	
C7407,08	F1H1C104A042	16V 0.1U	2	
C7409	F1H1H9R0A735	50V 9P	1	(EG)
C7416	F2A1E4700048	25V 47U	1	
C7427	F1H1H222A219	50V 2200P	1	
C7439	F1H1C104A042	16V 0.1U	1	
C7447,48	F1H0J1050012	6.3V 1U	2	
C7501	F1J0J475A008	6.3V 4.7U	1	
C7502	F1H1H1010005	50V 100P	1	
C7503	F1J0J475A008	6.3V 4.7U	1	
C7504,05	F1H1C104A042	16V 0.1U	2	
C7507	F1H1C104A008	16V 0.1U	1	
C7510	F1H1C104A042	16V 0.1U	1	
C7511	F1H1H1010005	50V 100P	1	
C7512	F1H1C104A008	16V 0.1U	1	
C7516,17	ECJ1VC1H180J	50V 18P	2	
C7518	ECJ1VC1H220J	50V 22P	1	
C7519	ECJ1VC1H180J	50V 18P	1	
C7520	F1H1C104A042	16V 0.1U	1	
C7522	F1H1H1010005	50V 100P	1	
C7523	F1H1H1030006	50V 0.01U	1	
C7524	F1H1C104A042	16V 0.1U	1	
C7528	F1H1C104A008	16V 0.1U	1	
C7529	ECEA0JKA470B	6.3V 47U	1	
C7531,32	ECJ1VC1H100D	50V 10P	2	
C7533	ECEA0JKA470B	6.3V 47U	1	
C7534	F1H1H1030006	50V 0.01U	1	
C7535	F1H1C104A008	16V 0.1U	1	
C7539	F1H1H4700004	50V 47P	1	
C7540	F1H1H1030006	50V 0.01U	1	
C7541	F1H1H4700004	50V 47P	1	
C7542	F1H1C104A042	16V 0.1U	1	
C7543	F1H1H4700004	50V 47P	1	
C7544	F1H1C104A042	16V 0.1U	1	

Ref. No.	Part No.	Part Name & Description	Pcs	Remarks
C7546	F1H0J1050012	6.3V 1U	1	
C7550	ECEA0JKA470B	6.3V 47U	1	
C7551	F1H1C104A042	16V 0.1U	1	
C7552,53	ECJ1VC1H221J	50V 220P	2	
C7554,55	F1H1H1030006	50V 0.01U	2	
C7565	F2A1E221A586	25V 220U	1	
C7569	ECQB1H222KF3	50V 2200P	1	
C7570	F2A1V470A533	35V 47U	1	
C7571	F2A1H2200032	50V 22U	1	
C7572	F2A1A2210063	10V 220U	1	
C7573	F2A1H2200032	50V 22U	1	
C7577	F1H1C104A042	16V 0.1U	1	
C7578,79	ECEA0JKA470B	6.3V 47U	2	
C7581	F1H1H1030006	50V 0.01U	1	
C7584	F4D55473A013	CAPACITOR	1	
C7585	ECEA0JKA101B	6.3V 100U	1	
C7592	F1H1A105A004	10V 1U	1	
D1501	MA2C165001VT	DIODE	1	
D3901	MA2C165001VT	DIODE	1	
D4005,06	MA3Z142D0LG	DIODE	2	
D7403	MA2C165001VT	DIODE	1	
D7501	B0BA03600021	DIODE	1	
D7502	B0ACCK000005	DIODE	1	
D7504	MAZ4300NLF	DIODE	1	
D7505,06	B0AADM000003	DIODE	2	
D7507	B0AAGM000007	DIODE	1	
D7508	MAZ4240NMF	DIODE	1	
D7509	B0JDCE000002	DIODE	1	
DP7501	A2BD00000099	FL DISPLAY TUBE	1	
IC1501	C0CBCDD00006	IC	1	
IC1502	C0CBCBD00018	IC	1	
IC1504	C0CBCYG00004	IC	1	
IC1505	C0CBCBD00018	IC	1	
IC1510	C0CBCDG00006	IC	1	
IC1511	C0CBCDD00008	IC	1	
IC3001	C1AB00002100	IC	1	
IC4009	C0ABBB000216	IC	1	
IC4011	C0DBAHD00013	IC	1	
IC4012	C0ABBB000118	IC	1	
IC4901	C0JBAA000353	IC	1	
IC7401	C0CBCYG00004	IC	1	
IC7402	C0DBCHD00004	IC	1	
IC7403	C0CBCDD00006	IC	1	
IC7501	C2CBJG000549	IC	1	
IC7502	C0EBE0000218	IC	1	
IC7503	C3EBJC000055	IC	1	
IC7504	C1ZBZ0002791	IC	1	
IC7505	C0EBJ0000336	IC	1	
IC7506	C0EBE0000457	IC	1	
IP1501	K5H3022A0013	IC PROTECTOR	1	⚠ ;
IP7501	K5H7512A0010	IC PROTECTOR	1	⚠
IR7501	B3RAD0000092	REMOTE SENSOR	1	
JK3001	K2HA612B0055	JACK,AV4 IN/OUT	1	
JK3002	K1U415B00001	JACK,AV3	1	
JK3003	K2HA210B0002	JACK,S-VIDEO IN/OUT	1	
JK3901	K1FB242B0004	JACK,AV1/AV2	1	(EB)
JK3901	K1FB242B0005	JACK,AV1/AV2	1	(EG,EBL,EP,EC)
JK3903	K1U407B00004	JACK,VIDEO/OPTICAL OUT	1	
K3901	D0YBR0000002	CHIP RESISTOR	1	(EBL,EP)
K4002	D0YDR0000006	CHIP RESISTOR	1	

Ref. No.	Part No.	Part Name & Description	Pcs	Remarks
K4012	D0YBR0000002	CHIP RESISTOR	1	(EB)
K7401	D0YBR0000002	CHIP RESISTOR	1	(EB)
K7405,06	D0YBR0000002	CHIP RESISTOR	2	(EB,EBL,EP)
K7503,04	D0YBR0000002	CHIP RESISTOR	2	
K7506,07	D0YBR0000002	CHIP RESISTOR	2	
K7512	D0YBR0000002	CHIP RESISTOR	1	
L1501	G0A220GA0026	COIL 22UH	1	
L1504	G0A220GA0026	COIL 22UH	1	
L4901	G0C220KA0065	COIL 22UH	1	
L7403	G0C2R2JA0019	COIL 2.2UH	1	(EB,EBL,EP,EC)
L7403	G0C470JA0019	COIL 47UH	1	(EG)
L7404	G0A220GA0026	COIL 22UH	1	
L7501	G0C390JA0055	COIL 390UH	1	
LB1503,04	J0JKB0000003	COIL	2	
LB1506	J0JKB0000003	COIL	1	
LB3001-03	J0JGC0000020	COIL	3	
LB3005-08	J0JBC0000011	COIL	4	
LB3009-11	J0JCC0000103	COIL	3	
LB3012,13	J0JBC0000011	COIL	2	
LB3907,08	J0JBC0000011	COIL	2	
LB3911	J0JGC0000020	COIL	1	
LB3912,13	J0JBC0000011	COIL	2	
LB4902	J0JGC0000020	COIL	1	
LB7401	J0JGC0000020	COIL	1	
LB7406	J0JHC0000032	COIL	1	
LB7408,09	J0JHC0000032	COIL	2	
LB7414,15	J0JHC0000032	COIL	2	
LB7501	D0YBR0000002	CHIP RESISTOR	1	
LB7507,08	J0JGC0000020	COIL	2	
LB7509	J0JCC0000060	COIL	1	
LB7510	J0JGC0000020	COIL	1	
LB7515-17	D0YBR0000002	CHIP RESISTOR	3	
LB7519	J0JKB0000037	COIL	1	
P1501	K1KA23A00003	CONNECTOR(23P)	1	
P1502	K1KA04A00196	CONNECTOR(4P)	1	
P7402	K1KA88A00002	CONNECTOR(88P)	1	
P7506	K1KA03A00173	CONNECTOR(3P)	1	
PP7401	K1KA18AA0288	CONNECTOR(18P)	1	
Q3907-10	2SD132800L	TRANSISTOR	4	(EB,EG,EC)
Q4004	2SB1218ARL	TRANSISTOR	1	
Q4006-09	2SD132800L	TRANSISTOR	4	
Q7401	2SD1819ARL	TRANSISTOR	1	
Q7501	2SB1218ARL	TRANSISTOR	1	
Q7502	2SD1819ARL	TRANSISTOR	1	
Q7503	2SB1218ARL	TRANSISTOR	1	
Q7504	2SD1819ARL	TRANSISTOR	1	
Q7506,07	2SD0601ARN	TRANSISTOR	2	
Q7508	2SD1819ARL	TRANSISTOR	1	
Q7510	2SD1994BR1VT	TRANSISTOR	1	
QR3914	UNR521300L	TRANSISTOR	1	(EB,EG,EC)
QR4002-05	UNR521100L	TRANSISTOR	4	
QR7401	UNR521300L	TRANSISTOR	1	

Ref. No.	Part No.	Part Name & Description	Pcs	Remarks
QR7403, 04	UNR521500L	TRANSISTOR	2	
QR7501	UNR521300L	TRANSISTOR	1	(EG,EC)
QR7503	UNR521400L	TRANSISTOR	1	(EB,EG,EC)
QR7506	UNR521200L	TRANSISTOR	1	
QR7507	UNR521000L	TRANSISTOR	1	
QR7508	UNR521400L	TRANSISTOR	1	
R1503	D0GB332JA002	1/10W 3.3K	1	
R1504	D0GB101JA002	1/10W 100	1	
R1505	ERDS2TJ271T	1/4W 270	1	
R1506	ERJ3RBD103V	1/16W 10K	1	
R1507	ERJ3RBD182V	1/16W 1.8K	1	
R1508	ERJ3RBD821V	1/16W 820	1	
R1511-13	ERDS2TJ271T	1/4W 270	3	
R1515	ERDS2TJ271T	1/4W 270	1	
R1520	D0GB822JA002	1/10W 8.2K	1	
R3006	D0GB822JA002	1/10W 8.2K	1	
R3007	D0GB330JA002	1/10W 33	1	
R3054-62	D0GB750JA002	1/10W 75	9	
R3901-03	D1BB75R0A010	RESISTOR	3	
R3912,13	D0GB103JA002	1/10W 10K	2	
R3914	D0GB471JA002	1/10W 470	1	
R3918	D0GB471JA002	1/10W 470	1	
R3919-21	D1BB75R0A010	RESISTOR	3	
R3922,23	D0GB471JA002	1/10W 470	2	
R3924	ERDS2TJ221T	1/4W 220	1	
R3925-27	D1BB75R0A010	RESISTOR	3	
R3928-30	D0GB750JA002	1/10W 75	3	
R3932	D0GB750JA002	1/10W 75	1	
R3934,35	D0GB750JA002	1/10W 75	2	
R3975,76	D0GB101JA002	1/10W 100	2	
R3983,84	D0GB103JA002	1/10W 10K	2	
R3987	D0GB473JA002	1/10W 47K	1	
R3988,89	D0GB102JA002	1/10W 1K	2	
R3990,91	D0GB473JA002	1/10W 47K	2	
R3992,93	D0GB102JA002	1/10W 1K	2	
R3994	D0GB473JA002	1/10W 47K	1	
R3995	D0GB153JA002	1/10W 15K	1	(EB,EG,EC)
R3996,97	D0GB124JA002	1/10W 120K	2	(EB,EG,EC)
R3998,99	D0GB154JA002	1/10W 150K	2	(EB,EG,EC)
R4002	D0GB103JA002	1/10W 10K	1	
R4004	D0GB103JA002	1/10W 10K	1	
R4006-08	D0GB823JA002	1/10W 82K	3	
R4010,11	D0GB473JA002	1/10W 47K	2	
R4013	D0GB823JA002	1/10W 82K	1	
R4014	D0GB103JA002	1/10W 10K	1	
R4016	D0GB225JA002	1/10W 2200K	1	(EB)
R4017	D0GB103JA002	1/10W 10K	1	
R4046,47	D0HB752ZA002	1/10W 7.5K	2	
R4055	D0HB123ZA002	1/16W 12K	1	
R4057	D0HB123ZA002	1/16W 12K	1	
R4059	D0YBR0000002	CHIP RESISTOR	1	(EB)
R4066,67	D0HB103ZA002	1/10W 10K	2	
R4071	D0GB473JA002	1/10W 47K	1	
R4074	D0GB473JA002	1/10W 47K	1	
R4076	D0GB821JA002	1/10W 820	1	

Ref. No.	Part No.	Part Name & Description	Pcs	Remarks
R4077	D0GB101JA002	1/10W 100	1	
R4078,79	D0GB272JA002	1/10W 2.7K	2	
R4080	D0GB101JA002	1/10W 100	1	
R4081	D0GB821JA002	1/10W 820	1	
R4088,89	D0GB272JA002	1/10W 2.7K	2	
R4090	D0GB221JA002	1/10W 220	1	
R4093	D0GB221JA002	1/10W 220	1	
R4094	D0GB223JA002	1/10W 22K	1	(EG,EBL,EP,EC)
R4901	D0GB101JA002	1/10W 100	1	
R4902	D0GB472JA002	1/10W 4.7K	1	
R7401	D0GB122JA002	1/10W 1.2K	1	(EG)
R7401	D0YBR0000002	CHIP RESISTOR	1	(EB,EBL,EP,EC)
R7402	D0GB103JA002	1/10W 10K	1	
R7403	D0GB153JA002	1/10W 15K	1	
R7404	D0GB223JA002	1/10W 22K	1	
R7405	D0GB471JA002	1/10W 470	1	
R7406	D0GB474JA002	1/10W 470K	1	
R7407	D0GB103JA002	1/10W 10K	1	
R7408	D0GB153JA002	1/10W 15K	1	
R7410	D0GB821JA002	1/10W 820	1	
R7421,22	D0GB101JA002	1/10W 100	2	
R7438-42	D0GB220JA002	1/10W 22	5	
R7443	D0GB101JA002	1/10W 100	1	(EG,EC)
R7444	ERJ3RED300V	1/16W 30	1	
R7445	ERJ3RBD682V	1/16W 6.8K	1	
R7446	ERJ3RBD202V	1/16W 2K	1	
R7501	D0GB102JA002	1/10W 1K	1	
R7502	D0GB392JA002	1/10W 3.9K	1	
R7503	D0GB104JA002	1/10W 100K	1	
R7504	D0GB102JA002	1/10W 1K	1	
R7505	D1BB1502A010	RESISTOR	1	
R7506	D0GB104JA002	1/10W 100K	1	
R7507	D1BB15010002	RESISTOR	1	
R7508	D1BB5601A010	RESISTOR	1	
R7510	D0YBR0000002	CHIP RESISTOR	1	
R7515	D0GB472JA002	1/10W 4.7K	1	(EG,EC)
R7518	ERJ3RBD273V	1/16W 27K	1	
R7527-29	D0GB101JA002	1/10W 100	3	
R7531	D0GB104JA002	1/10W 100K	1	
R7532	D0GB332JA002	1/10W 3.3K	1	
R7533	D0YBR0000002	CHIP RESISTOR	1	
R7534	D0GB103JA002	1/10W 10K	1	
R7535-37	D0GB101JA002	1/10W 100	3	
R7543,44	D0GB101JA002	1/10W 100	2	
R7548,49	D0GB472JA002	1/10W 4.7K	2	
R7550	D0GB223JA002	1/10W 22K	1	
R7551-53	D0GB101JA002	1/10W 100	3	
R7557	D0GB511JA002	1/10W 510	1	
R7558,59	D0GB202JA002	1/10W 2K	2	
R7560	D0GB472JA002	1/10W 4.7K	1	
R7561-66	D0GB101JA002	1/10W 100	6	
R7569	D0YBR0000002	CHIP RESISTOR	1	
R7570	D0GB392JA002	1/10W 3.9K	1	
R7571	D0GB101JA002	1/10W 100	1	
R7576	D0GB102JA002	1/10W 1K	1	
R7577,78	D0GB103JA002	1/10W 10K	2	
R7579	D0GB223JA002	1/10W 22K	1	
R7582	D0GB104JA002	1/10W 100K	1	
R7583	D0GB472JA002	1/10W 4.7K	1	
R7584	D0GB473JA002	1/10W 47K	1	
R7585	D0GB225JA002	1/10W 2200K	1	
R7586	D0GB273JA002	1/10W 27K	1	

Ref. No.	Part No.	Part Name & Description	Pcs	Remarks
R7587	D0GB224JA002	1/10W 220K	1	
R7588	D0GB104JA002	1/10W 100K	1	
R7589	D0GB221JA002	1/10W 220	1	
R7590	D0GB104JA002	1/10W 100K	1	
R7597-99	D0GB822JA002	1/10W 8.2K	3	
R7600	D0GB103JA002	1/10W 10K	1	
R7601	D0GB102JA002	1/10W 1K	1	
R7606	D1BB3902A010	RESISTOR	1	
R7607	D0GB101JA002	1/10W 100	1	
R7608	D1BB4302A010	RESISTOR	1	
R7612	D0GB332JA002	1/10W 3.3K	1	
R7614	D0GB470JA002	1/10W 47	1	
R7615,16	D0GB473JA002	1/10W 47K	2	
R7617	ERDS2TJ331T	1/4W 330	1	
R7619	D0GB103JA002	1/10W 10K	1	
R7620	D0GB473JA002	1/10W 47K	1	
R7621	D0GB104JA002	1/10W 100K	1	
R7622	D0GB153JA002	1/10W 15K	1	
R7623	D0GB181JA002	1/10W 180	1	
R7628	D0GB223JA002	1/10W 22K	1	
R7639,40	D0GB272JA002	1/10W 2.7K	2	
R7641	D0GB473JA002	1/10W 47K	1	
R7642,43	D0GB562JA002	1/10W 5.6K	2	
R7644	D0GB222JA002	1/10W 2.2K	1	
R7648	ERDS2TJ330T	1/4W 33	1	
R7649	D0GB101JA002	1/10W 100	1	
R7651	D0GB472JA002	1/10W 4.7K	1	
R7652,53	D0GB101JA002	1/10W 100	2	
R7654	D0GB100JA002	1/10W 10	1	(EB)
R7655	D0GB101JA002	1/10W 100	1	
S7501	EVQPC105K	SWITCH	1	
S7502	EVQPC105K	SWITCH	1	
S7503	EVQPC105K	SWITCH	1	
S7504	EVQPC105K	SWITCH	1	
S7506	EVQPC105K	SWITCH	1	
S7507	EVQPC105K	SWITCH	1	
S7508	EVQPC105K	SWITCH	1	
T7501	G4D1C0000003	TRANSFORMER	1	
W701	D0YBR0000002	CHIP RESISTOR	1	
W702-05	D0YDR0000006	CHIP RESISTOR	4	
W706-09	D0YBR0000002	CHIP RESISTOR	4	
W711-28	D0YBR0000002	CHIP RESISTOR	18	
W729	D0YDR0000006	CHIP RESISTOR	1	
W730,31	D0YBR0000002	CHIP RESISTOR	2	
X7501	H0D100500018	CRYSTAL OSCILLATOR	1	
X7502	H0A327200108	CRYSTAL OSCILLATOR	1	
n	03	VEP07A77A/B/C		(TUNER P.C.B.)
C7801	F1H1H1030006	50V 0.01U	1	(EB)
C7802	F2A0J470A599	6.3V 47U	1	(EB)
C7809	F1H1H1030006	50V 0.01U	1	
C7813	F2A0J470A599	6.3V 47U	1	
C7814	F2A1H2200032	50V 22U	1	
C7817	F2A0J470A599	6.3V 47U	1	
C7818,19	F1H1H330A736	50V 33P	2	
C7820	F1H1C104A042	16V 0.1U	1	
C7821,22	F1H1H1030006	50V 0.01U	2	
C7824	F2A0J470A599	6.3V 47U	1	
C7825	F1H1H1010005	50V 100P	1	(EBL,EP)
C7828	F1H1H1030006	50V 0.01U	1	
C7838	F2A1E4700048	25V 47U	1	(EG,EC)

Ref. No.	Part No.	Part Name & Description	Pcs	Remarks
D7802	MAZ4300NMF	DIODE	1	
K7807	D0YBR0000002	CHIP RESISTOR	1	(EB)
K7808	D0YBR0000002	CHIP RESISTOR	1	(EG,EBL,EP,EC)
K7809	D0YBR0000002	CHIP RESISTOR	1	(EB,EG,EC)
K7810	D0YBR0000002	CHIP RESISTOR	1	(EG,EBL,EP,EC)
K7811	D0YBR0000002	CHIP RESISTOR	1	(EB)
L7802	G0C270JA0019	COIL 27UH	1	(EB)
LB7801	J0JHC0000032	COIL	1	(EB)
LB7802-04	J0JHC0000032	COIL	3	
LB7805	J0JHC0000032	COIL	1	(EB)
PS7801	K1KB18B00012	CONNECTOR(18P)	1	
Q7802	2SB1218ARL	TRANSISTOR	1	(EBL,EP)
QR7806	UNR211500L	TRANSISTOR	1	(EB)
QR7807	B1GBCFJA0002	TRANSISTOR	1	(EB)
R7809	D0GB271JA002	1/10W 270	1	(EB)
R7810	D0GB100JA002	1/10W 10	1	(EB)
R7811	ERG2SJ471E	2W 470	1	
R7812	ERJ6GEYJ681V	1/8W 62	1	(EBL,EP)
R7813,14	D0GB271JA002	1/10W 270	2	(EB)
R7815,16	D0GB471JA002	1/10W 470	2	
R7817	ERG2SJ471E	2W 470	1	
R7818	D0GB221JA002	1/10W 220	1	(EBL,EP)
R7820	D0GB102JA002	1/10W 1K	1	(EBL,EP)
R7823	D0GB562JA002	1/10W 5.6K	1	(EB)
R7844	ERJ6GEYJ681V	1/8W 680	1	(EBL,EP)
R7845	D0YBR0000002	CHIP RESISTOR	1	(EG,EC)
R7846	D0GB562JA002	1/10W 5.6K	1	(EG,EC)
TU7801	ENG57D02G1F	TUNER	1	(EB)
TU7801	ENGF7501GF	TUNER	1	(EG,EC)
TU7801	ENGF7502GF	TUNER	1	(EBL,EP)
W501	D0YBR0000002	CHIP RESISTOR	1	
W502	D0YDR0000006	CHIP RESISTOR	1	
W503,04	D0YBR0000002	CHIP RESISTOR	2	
W505	D0YDR0000006	CHIP RESISTOR	1	
W506,07	D0YBR0000002	CHIP RESISTOR	2	
W508	D0YDR0000006	CHIP RESISTOR	1	
W509,10	D0YBR0000002	CHIP RESISTOR	2	
W511-15	D0YDR0000006	CHIP RESISTOR	5	
W516,17	D0YBR0000002	CHIP RESISTOR	2	
W518	D0YDR0000006	CHIP RESISTOR	1	
W519-21	D0YBR0000002	CHIP RESISTOR	3	
W522	D0YDR0000006	CHIP RESISTOR	1	
W523	D0YBR0000002	CHIP RESISTOR	1	
W524-28	D0YDR0000006	CHIP RESISTOR	5	
W529	D0YBR0000002	CHIP RESISTOR	1	
W530	D0YDR0000006	CHIP RESISTOR	1	
W531-35	D0YBR0000002	CHIP RESISTOR	5	
W536	ERJ8GEY0R00V	1/4W 0	1	
W537	D0YBR0000002	CHIP RESISTOR	1	
W538,39	D0YDR0000006	CHIP RESISTOR	2	
W540,41	D0YBR0000002	CHIP RESISTOR	2	
W542-46	D0YDR0000006	CHIP RESISTOR	5	
W547-49	D0YBR0000002	CHIP RESISTOR	3	
W550	ERJ8GEY0R00V	1/4W 0	1	
n	04	VEP07A51A/E		(NICAM DECORDE P.C.B.)
C7301	F1H1C104A008	16V 0.1U	1	(EB,EBL,EP,EC)

Ref. No.	Part No.	Part Name & Description	Pcs	Remarks
C7301	F1H1H1030006	50V 0.01U	1	(EG)
C7302	D0YBR0000002	CHIP RESISTOR	1	
C7303	ECEA0JKA101B	6.3V 100U	1	
C7304	F1H1C104A008	16V 0.1U	1	(EG)
C7305	ECEA0JKA101B	6.3V 100U	1	(EB,EBL,EP,EC)
C7306	F1H1H1030007	50V 0.01U	1	(EB,EBL,EP,EC)
C7307,08	ECJ1VC1H100D	50V 10P	2	(EB,EBL,EP,EC)
C7309	ECJ1VB1H152K	50V 1500P	1	(EG)
C7309	F1H1H1010005	50V 100P	1	(EB,EBL,EP,EC)
C7310	ECJ1VB1H152K	50V 1500P	1	(EG)
C7310,11	F1H1H1010005	50V 100P	2	(EB,EBL,EP,EC)
C7312,13	ECEA1CKA100B	16V 10U	2	
C7314	F1H1C104A008	16V 0.1U	1	(EB,EBL,EP,EC)
C7315	ECJ1VB1A474K	10V 470K	1	(EG)
C7316	F1H1H472A219	50V 4.7U	1	(EG)
C7317	ECEA1CKA470B	16V 47U	1	
C7318	ECEA1CKA100B	16V 10U	1	
C7319	ECJ1VB1H152K	50V 1500P	1	(EG)
C7323	ECJ1VC1H102J	50V 1000P	1	(EB,EBL,EP,EC)
C7324	F1H1C104A008	16V 0.1U	1	(EB,EBL,EP,EC)
C7324,25	F1H1H1030006	50V 0.01U	2	(EG)
C7326	ECJ1VB1A474K	10V 470K	1	(EG)
C7327	ECJ1VB1H123K	50V 0.012U	1	(EG)
C7328	ECJ1VC1H681J	50V 680P	1	(EG)
C7329	D0YBR0000002	CHIP RESISTOR	1	
C7330	D0GB822JA002	CHIP RESISTOR	1	(EB,EBL,EP,EC)
C7330	ECJ1VC1H681J	50V 680P	1	(EG)
C7331	ECJ1VB1H123K	50V 0.012U	1	(EG)
C7332	F1H1C104A008	16V 0.1U	1	(EB,EBL,EP,EC)
C7333	ECJ1VB1A474K	10V 0.47U	1	(EG)
C7333	F1H1C104A042	16V 0.1U	1	(EB,EBL,EP,EC)
C7334	ECEA1HKA2R2B	50V 2.2U	1	(EB,EBL,EP,EC)
C7335	F1H1C104A008	16V 0.1U	1	(EB,EBL,EP,EC)
C7335	F1H1H1030006	50V 0.01U	1	(EG)
C7336	F1H1C104A042	16V 0.1U	1	(EG)
C7337,38	ECJ1VB1A474K	10V 470K	2	(EG)
IC7301	C0ZBZ0000580	IC	1	(EG)
IC7301	C1AB00001404	IC	1	(EB,EBL,EP,EC)
IC7302	C0EAH0000051	IC	1	(EB,EBL,EP,EC)
K7301,02	D0YBR0000002	CHIP RESISTOR	2	
K7303	D0YBR0000002	CHIP RESISTOR	1	(EB,EBL,EP,EC)
K7305	D0YBR0000002	CHIP RESISTOR	1	
K7306	D0YBR0000002	CHIP RESISTOR	1	(EG)
L7303	G0C1R0JA0019	COIL 1UH	1	(EB,EBL,EP,EC)
LB7301,02	J0JCC0000124	COIL	2	(EB,EBL,EP,EC)
LB7303	J0JCC0000080	COIL	1	(EB,EBL,EP,EC)
PK7301	K1MM07B00002	CONNECTOR(7P)	1	
PK7302	K1MM06B00002	CONNECTOR(6P)	1	

Ref. No.	Part No.	Part Name & Description	Pcs	Remarks
R7301	D0YBR0000002	CHIP RESISTOR	1	
R7304	D0GB101JA002	1/10W 100	1	(EB,EBL,EP,EC)
R7305	D1BB10000002	RESISTOR	1	(EG)
R7306	D1BB39010002	RESISTOR	1	(EG)
R7307	D0GB472JA002	1/10W 4.7K	1	(EG)
R7307	D0YBR0000002	CHIP RESISTOR	1	(EB,EBL,EP,EC)
R7308	D0GB752JA002	1/10W 7.5K	1	(EG)
R7309	D0GB103JA002	1/10W 10K	1	(EB,EBL,EP,EC)
R7310,11	D0GB221JA002	1/10W 220	2	(EB,EBL,EP,EC)
R7312	D1BB2200A010	RESISTOR	1	(EB,EBL,EP,EC)
R7312	D1BB68010002	RESISTOR	1	(EG)
R7313	D1BB2200A010	RESISTOR	1	(EB,EBL,EP,EC)
R7313	D1BB68010002	RESISTOR	1	(EG)
R7314	D0YBR0000002	CHIP RESISTOR	1	(EB,EBL,EP,EC)
R7314	D1BB68010002	RESISTOR	1	(EG)
R7315	D0YBR0000002	CHIP RESISTOR	1	
R7316	D1BB33010002	RESISTOR	1	(EG)
R7317	D0YBR0000002	CHIP RESISTOR	1	
R7318	D1BB33010002	RESISTOR	1	(EG)
R7319	D0YBR0000002	CHIP RESISTOR	1	
R7320	D1BB33010002	RESISTOR	1	(EG)
R7321	D0GB562JA002	1/10W 5.6K	1	(EG)
R7322	D0YBR0000002	CHIP RESISTOR	1	(EB,EBL,EP,EC)
R7323	D0GB562JA002	1/10W 5.6K	1	(EG)
R7324,25	D0GB101JA002	1/10W 100	2	
W6,W7	D0YBR0000002	CHIP RESISTOR	2	(EB,EBL,EP,EC)
X7301	H0D245500016	CRYSTAL OSCILLATOR	1	(EB,EBL,EP,EC)
X7301	H0H400400006	CRYSTAL OSCILLATOR	1	(EG)
n	06	VEP01968A		(POWER SUPPLY P.C.B.)
C1120	ECQU2A223MLC	0.022U	1	⚠
C1121	ECQU2A683MLC	0.068U	1	⚠
C1122-24	F1B2G1020002	1000P	3	⚠
C1143	ECEC2GG680FZ	400V 68U	1	
C1150	EEUFM1V680B	35V 68U	1	
C1151	F1B3D102A011	2V 1000P	1	
C1152	ECJ2VC1H331J	50V 330P	1	
C1153	ECJ2VB1H222K	50V 2200P	1	
C1154	ECJ2VB1H102K	50V 1000P	1	
C1200	F1J1E104A081	25V 0.1U	1	
C1201	ECJ2VB1E473K	25V 0.047U	1	
C1270,71	F2A1C152A626	16V 1500U	2	
C1272	F2A1C102A625	16V 1000U	1	
C1273	EEUFM1C121B	16V 120U	1	
C1274	F1J1E104A081	25V 0.1U	1	
C1400	EEUFM1E221B	25V 220U	1	
C1401	F1J1C1050030	16V 1U	1	
C1402	ECJ2VB1E103K	25V 0.01U	1	
C1403	ECJ2VC1H391J	50V 390P	1	
C1404	ECJ2VB1H472K	50V 4700P	1	
C1405	ECJ2VB1H102K	50V 1000P	1	
C1406	F2A0J681A550	6.3V 680U	1	
C1407	F2A1A2210063	10V 220U	1	
C1408	F1J1E104A081	25V 0.1U	1	
C1601	EEUFM1E221B	25V 220U	1	
C1602-04	F1J1E104A081	25V 0.1U	3	
C1605	ECJ2VC1H181J	50V 180P	1	
C1606	ECJ2VB1E103K	25V 0.01U	1	

Ref. No.	Part No.	Part Name & Description	Pcs	Remarks
C1607	F2A1A681A539	10V 680U	1	
C1608	F1J1E104A081	25V 0.1U	1	
C1701	EEUFM1E221B	25V 220U	1	
C1702,03	F1H1C104A042	16V 0.1U	2	
C1704	F1H1H1030006	50V 0.01U	1	
C1705	ECJ1VC1H121J	50V 120P	1	
C1706	F1H1H1030006	50V 0.01U	1	
C1707	F2A0J681A550	6.3V 680U	1	
C1800	F2A1E4700048	25V 47U	1	
D1140	B0EDKT000009	DIODE	1	
D1151	B0HAGM000006	DIODE	1	
D1152	MAZ4100NMF	DIODE	1	
D1155	MAZ73000BC	DIODE	1	
D1156	MA2C165001VT	DIODE	1	
D1157	B0HADV000001	DIODE	1	
D1270	B0JBSG000010	DIODE	1	
D1400	B0JCPE000015	DIODE	1	
D1401	B0JCPD000021	DIODE	1	
D1601	B0JCPD000021	DIODE	1	
D1701	B0JCPE000015	DIODE	1	
D1800	MA2J11100L	DIODE	1	
F1101	K5D202BK0005	FUSE	1	⚠
IC1150	C0DACZH00017	IC	1	
IC1200	C0DAEMB00003	IC	1	
IC1400	C0DAAJG00007	IC	1	
IC1401	C0CBCYG00004	IC	1	
IC1601	C0DBAKG00007	IC	1	
IC1701	C0DBAKG00005	IC	1	
IP1601	K5H3022A0013	IC PROTECTOR	1	⚠
L1120,21	G0B233D00001	COIL	2	⚠
L1270	G0A100ZA0041	COIL 10UH	1	
L1400	G0A100HA0023	COIL 10UH	1	
L1401	G0A330ZA0041	COIL 33UH	1	
L1601	G0A150ZA0041	COIL 15UH	1	
L1701	G0A220ZA0041	COIL 22UH	1	
LB1600	J0JHC0000048	FILTER	1	
LB1700	J0JHC0000048	FILTER	1	
P1101	K2AA2H000007	AC INLET	1	⚠
P1102	K1KB23A00002	CONNECTOR(FEMALE) 23P	1	
Q1200	B3PBA0000237	TRANSISTOR	1	⚠
Q1270	B1DHED000008	TRANSISTOR	1	
Q1600	B1DHED000008	TRANSISTOR	1	
Q1700	B1DDCC000009	TRANSISTOR	1	
QR1301-04	UNR221300L	TRANSISTOR	4	
QR1800	UNR211300L	TRANSISTOR	1	
QR1801	UNR221300L	TRANSISTOR	1	
R1150	ERJ6GEYJ180V	1/8W 18	1	
R1151	ERJ6GEYJ682V	1/8W 6.8K	1	
R1152	ERJ6GEYJ103V	1/8W 10K	1	
R1153	ERJ6GEYJ180V	1/8W 18	1	
R1154	ERJ6GEYG912V	1/8W 9.1K	1	
R1155	ERJ6GEYG471V	1/8W 470	1	
R1156	ERJ6GEYG163V	1/8W 16K	1	
R1157	ERJ6GEYG511V	1/8W 510	1	
R1158	ERX2SJR22E	RESISTOR	1	
R1200	ERJ6GEYG122V	1/8W 1.2K	1	
R1201	ERJ6GEYG822V	1/8W 8.2K	1	
R1205	ERJ6GEYJ224V	1/8W 220K	1	
R1206	ERJ6GEYG242V	1/8W 2.4K	1	
R1207	ERJ6GEYJ103V	1/8W 10K	1	

Ref. No.	Part No.	Part Name & Description	Pcs	Remarks
R1208	ERJ6GEYJ222V	1/8W 2.2K	1	
R1209,10	ERJ6GEYJ102V	1/8W 1K	2	
R1270,71	ERJ6GEYJ472V	1/8W 4.7K	2	
R1311	ERJ6GEYJ472V	1/8W 4.7K	1	
R1401	ERJ6GEYJ104V	1/8W 100K	1	
R1402	ERJ6RBD821V	1/10W 820	1	
R1404	ERJ6RBD102V	1/10W 1K	1	
R1405	ERJ6GEYJ472V	1/8W 4.7K	1	
R1407	ERJ6RED820V	1/10W 82	1	
R1409	ERJ6RBD182V	1/10W 1.8K	1	
R1410	ERJ6RBD151V	1/10W 150	1	
R1411	ERJ6RBD202V	1/10W 2K	1	
R1601	D1BFR0150001	15	1	
R1602	ERJ6GEYJ513V	1/8W 51K	1	
R1603	ERJ6RBD242V	1/10W 2.4K	1	
R1604	ERJ6RBD153V	1/10W 15K	1	
R1605	ERJ6RBD272V	1/10W 2.7K	1	
R1701	D1BFR047A010	47	1	
R1702	D0GB333JA002	1/10W 33K	1	
R1703	D0YBR0000002	CHIP RESISTOR	1	
R1704	ERJ3RBD103V	1/16W 10K	1	
R1705	ERJ3RBD472V	1/16W 4.7K	1	
R1800	ERJ6GEYJ471V	1/8W 470	1	
R1801	ERJ6GEYJ104V	1/8W 100K	1	
R1802	ERJ6GEYJ472V	1/8W 4.7K	1	
R1803	ERJ6GEYJ103V	1/8W 10K	1	
T1150	ETS29AZ2G6AC	TRANSFORMER	1	⚠
VA1110	ERZVA5V471	SURGE ABSORBER	1	⚠
ZA1103,04	EYF52BCY	FUSE HOLDER	2	
n	07	VEP70115A		(FRONT(L) P.C.B.)
P7001	K1KA03A00173	CONNECTOR(3P)	1	
S7001	EVQPC105K	SWITCH	1	